EG4® 9K & 12K AC MINI-SPLIT

USER MANUAL

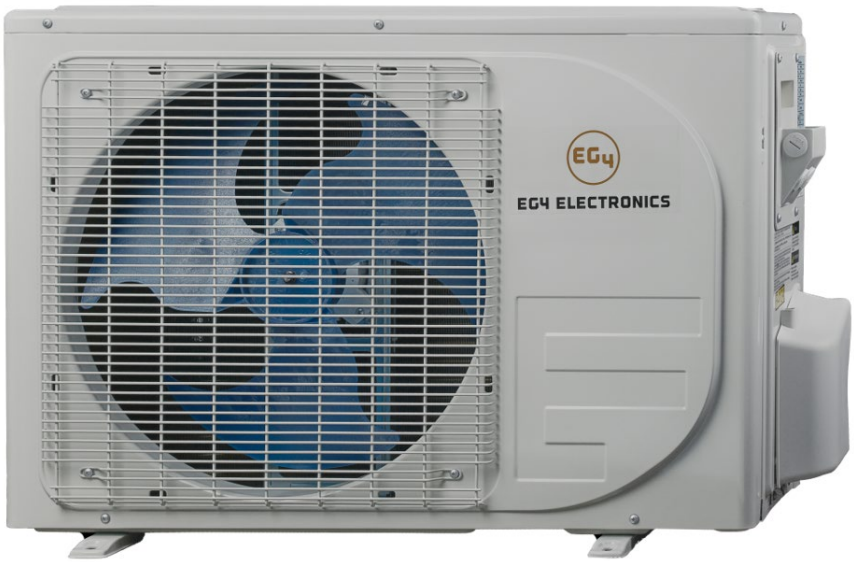

©2024 EG4 ELECTRONICS, LLC. ALL RIGHTS RESERVED.
VERSION 2.0.2 | INFORMATION SUBJECT TO CHANGE WITHOUT NOTICE.
MODEL #: DGWA3-09K & DGWA3-12K

TABLE OF CONTENTS

1. TECHNICAL SPECIFICATIONS 1
2. SAFETY 3
   2.1 SAFETY INSTRUCTIONS 3
   2.2 IMPORTANT SAFETY NOTIFICATIONS 3
3. BRIEF INTRODUCTION 6
   3.1 MINI-SPLIT FEATURES 6
   3.2 PACKING LIST 6
4. INSTALLATION TOOLS 7
5. INDOOR UNIT INSTALLATION 7
   5.1 SELECT INSTALLATION LOCATION 7
   5.2 WALL BRACKET INSTALLATION 8
   5.3 DRILL WALL HOLE 9
   5.4 CONNECT SIGNAL CABLE 10
   5.5 PREPARE PIPING 11
   5.6 MOUNT INDOOR UNIT 13
6. OUTDOOR UNIT INSTALLATION 15
   6.1 SELECT INSTALLATION LOCATION 15
   6.2 INSTALL DRAIN JOINT 16
   6.3 SECURE UNIT 16
   6.4 CONNECT SIGNAL AND POWER CABLES 17
   6.5 WIRING DIAGRAMS 18
   6.6 INSTALL REFRIGERANT LINE SET 20
   6.7 RELEASE REFRIGERANT INTO THE SYSTEM 22
   6.8 GAS LEAK TESTS 22
7. ELECTRICAL CHECKS 23
8. TEST RUN 24
   8.1 BEFORE TEST RUN 24
   8.2 INSTRUCTIONS 24
   8.3 OPERATING TEMPERATURE RANGES 25
   8.4 OPTIMAL OPERATION 25
   8.5 AIRFLOW DIRECTION 26
   8.6 INDOOR UNIT DISPLAY 27
   8.7 REMOTE CONTROL OPERATION 28
   8.8 MANUAL OPERATION 30
9. PHONE APP 31
   9.1 INSTALLATION 31
   9.2 USING THE APP 35
10. CARE AND MAINTENANCE 37
   10.1 CLEANING THE INDOOR UNIT 37
   10.2 PREPARATION FOR EXTENDED NON-OPERATION 39
   10.3 PRE-SEASON INSPECTION 39
11. TROUBLESHOOTING 40
   11.1 COMMON ISSUES AND CAUSES 40
   11.2 PROBLEMS, CAUSES, AND SOLUTIONS 41
   11.3 INDOOR UNIT LED ERROR CODES 42

1. TECHNICAL SPECIFICATIONS

ELECTRICAL	9K SYSTEM	12K SYSTEM
RATED VOLTAGE	115VAC	115VAC
RATED CURRENT - COOLING	5.97A	8.45A
RATED CURRENT - HEATING	6.37A	7.47A
INPUT POWER	190 – 1,000W	190 – 1,050W
FREQUENCY	60Hz	
MINIMUM CIRCUIT AMPACITY	19.05A	
MAXIMUM BREAKER SIZE	20A	
MAXIMUM STARTING CURRENT	4A	
RATED COOLING		
NOMINAL CAPACITY	9,000 BTU/h	12,000 BTU/h
CAPACITY RANGE	3,000 – 10,000 BTU/h	3,000 – 13,000 BTU/h
EER	13.23	12.5
SEER2	29.5	28.5
RATED HEATING		
NOMINAL CAPACITY	9,700 BTU/h	12,000 BTU/h
CAPACITY RANGE	3,000 – 11,000 BTU/h	3,000 – 13,000 BTU/h
HSPF2	10.7	11.3
SYSTEM DATA		
DESIGN PRESSURE (PSIG)	<651 PSI	
REFRIGERANT	R410A/45.86 oz. (1.35L)	
PRE-CHARGED REFRIGERANT LINE	16.4 ft. (5m)	
CHARGE REQUIRED PER ADDITIONAL FT	0.2 oz. (6ml)	
LIQUID VALVE DIAMETER	0.25 in. (6.35mm)	
GAS VALVE DIAMETER	0.5 in. (12.7mm)	
MAX REFRIGERANT PIPE LENGTH	49 ft. (15m)	
MAX ELEVATION BETWEEN UNITS	26 ft.	
COMPRESSOR SPECIFICATIONS		
TYPE	2 × Rotary	
INPUT POWER	190 – 1,000W	190 – 1,050W
RATED LOAD AMPERAGE (RLA)	3.6A	

INDOOR UNIT DATA		
RATED LOAD AMPERAGE (RLA)	0.48A	
SPEED (TURBO/5/4/3/2/1)	850/800/750/700/650/630 r/min	900/850/800/750/700/680 r/min
AIR FLOW (TURBO/5/4/3/2/1)	410/380/350/320/285/265 CFM	442/410/380/350/320/305 CFM
SOUND PRESSURE (TURBO/5/4/3/2/1)	36/35/34/33/31/30 dB(A)	37/36/35/34/33/32 dB(A)
MOISTURE REMOVAL	2.1 pt/hr. (1.0L/hr.)	2.65 pt/hr. (1.25L/hr.)
UNIT DIMENSIONS (W×D×H)	42.5×9.3×13.0 in. (1080×237×330mm)	
PACKAGING DIMENSIONS (W×D×H)	44.9×11.8×14.3 in. (1140×300×362mm)	
UNIT/PACKAGED WEIGHT	33.1/38.6 lbs. (15.0/17.5kg)	
OPERATING TEMPERATURE (COOLING)	61 – 90°F (16 – 32°C)	
OPERATING TEMPERATURE (HEATING)	32 – 90°F (0 – 32°C)	
OUTDOOR UNIT DATA		
RATED LOAD AMPERAGE (RLA)	0.42A	
SPEED (HI/MED/LO)	800 r/min	
AIR FLOW (HI/MED/LO)	1,060 CFM	
SOUND PRESSURE (HI/MED/LO)	51 dB(A)	52 dB(A)
UNIT DIMENSIONS (W×D×H)	31.6×12.7×22.2 in. (802×323×564mm)	
PACKAGING DIMENSIONS (W×D×H)	35.8×15.9×24.5 in. (910×405×622mm)	
NET/GROSS WEIGHT	70.6/79.4 lbs. (32.0/36.0kg)	
OPERATING TEMPERATURE (COOLING)	32 – 131°F (0 – 55°C)	
OPERATING TEMPERATURE (HEATING)	5 – 86°F (-15 – 30°C)	
ACCESSORIES		
CONTROL	Remote	
SIGNAL CABLE	18AWG (4 Stranded)	
INSTALLATION COPPER KIT	16.4 ft. (5m)	
WARRANTY		
LIMITED WARRANTY	5-year limited warranty	

2. SAFETY

DANGER! ***Hazardous Voltage Circuits!***
AVERTISSEMENT! ***Circuits à tension élevée!***

2.1 SAFETY INSTRUCTIONS

International safety regulations have been strictly observed in the design and testing of the mini-split. Before beginning any work, carefully read all safety instructions, and always observe them when working on or with the mini-split. The installation must follow all applicable national or local standards and regulations.

Incorrect installation may cause:

- Injury or death to the installer, operator or third party
- Damage to the mini-split or other attached equipment

2.2 IMPORTANT SAFETY NOTIFICATIONS

There are various safety concerns that must be carefully observed before, during, and after the installation, as well as during future operation and maintenance. The following are important safety notifications for the installer and any end users of this product under normal operating conditions.

1. This equipment requires the handling and installation of high-pressure gases and hazardous levels AC and DC voltages. Ensure that all the wiring is compliant with local regulations.
2. All electrical work must be performed by a licensed technician in accordance with local regulations and the instructions provided in this guide.
3. Only authorized service technicians should repair or perform maintenance on this unit.
4. If the unit operates abnormally (*emits strange noises or a burning smell*), immediately turn off the unit and disconnect the power to avoid electric shock, fire, and/or injury. Call the distributor for further assistance.
5. When moving or relocating the air conditioner, consult experienced service technicians for disconnection and re-installation of the unit.
6. Personal Protection Equipment (PPE) must be used while installing this equipment. The manufacturer and any resellers of this equipment assume no responsibility for any failure to properly protect personnel from injury.
7. Failure to follow all applicable safety standards will result in a void of warranty.
8. The unit contains fluorinated gases. For specifics on the type of gas used, please refer to the label on the outdoor unit.
9. Never supply power to the unit unless all wiring and tubing are completely connected and re-checked.
10. If the air conditioner is used together with burners or other heating devices, thoroughly ventilate the room to avoid oxygen deficiency.
11. This unit must be properly grounded and plugged into a GFCI-rated outlet.

12. For all electrical work, fuse the specified cables. Connect cables tightly and clamp them securely to prevent external forces from damaging the terminal. Improper electrical connections could overheat, causing fire and/or electrical shock.
13. The unit and any solar modules must be properly grounded in accordance with local electrical and building codes.
14. Compatible MC4 connectors must be used.
15. Use only the provided parts and accessories for installation. Using any non-standard parts could result in water leakage, electrical shock, fire, or cause the unit to fail.
16. Only install the unit in a location which can support the weight of the unit. Failure to do so could result in the unit falling and injuring personnel or damaging property.
17. In certain functional environments (*such as kitchens and server rooms etc.*), the use of specially designed air-conditioning units is highly recommended.
18. If the supplied communication cable is damaged, it must be replaced by the manufacturer, its service agent, or a similarly qualified person to avoid a hazard.

DO NOT: Install the unit within 1 meter of any combustible materials.
DO NOT: Share the electrical circuit with other appliances. You must use an independent power supply. An improper or insufficient power supply could cause fire or electrical shock.
DO NOT: Allow any substances or gases to enter the unit when connecting the refrigerant piping. The presence of other gases or substances will lower the unit's capacity and may cause abnormally high pressure during the operation cycle. This could cause an explosion and/or injury.
DO NOT: Allow children to play with the air conditioner. Children should be always supervised around the unit.
DO NOT: Insert your fingers, rods, or other objects into the air inlet or outlet. The fan within the unit could be rotating at high speeds and could cause injury.
DO NOT: Use flammable sprays such as hair spray, lacquer, or paint near the unit. These could cause fire and/or an explosion.
DO NOT: Install or operate the unit in a room where it could be exposed to excessive amounts of water (*such as a bathroom or laundry room*). Too much exposure to water can cause electrical components to short circuit.
DO NOT: Expose your skin or body directly to the cool air coming from the unit for a prolonged period of time.
DO NOT: Operate the air conditioner with wet hands. This could cause electrical shock.
DO NOT: Turn on the power until the installation has been completed.

DISCLAIMER

EG4 reserves the right to make changes to the material herein at any time without notice.
Please refer to www.eg4electronics.com for the most updated version of our manuals/spec sheets.

⚠ **WARNING:** Cancer and Reproductive Harm - www.P65Warnings.ca.gov

NOTE: This unit contains fluorinated greenhouse gases.

- For specific information on the type of gas and the amount, please refer to the relevant label on the unit itself.
- Service, maintenance, and repair of this unit must be performed by a certified technician.
- Product un-installation and recycling must be performed by a certified technician.
- For equipment that contains fluorinated greenhouse gases in quantities of 5 tons of CO_2 equivalent or more, but less than 50 tons of CO_2 equivalent, and has a leak-detection system installed, it must be checked for leaks at least every 24 months.
- It is strongly recommended to keep a record of all leak checks throughout the unit's lifetime

IMPORTANT: Maximum Line Set Length and Height Specifications

The table below displays the maximum length and height the refrigerant line sets can be installed for each system based on its respective capacity. In order to achieve some of these lengths, line set extension kits must be used (*not included, see below).* Any attempt to increase the line set length beyond what is specified in the table below, could result in reduced heating/cooling performance, system damage or failure, and **WILL VOID THE WARRANTY.**

ITEM	9K & 12K
Maximum line set length	49 ft. (15m)
Maximum height difference between indoor and outdoor unit	26 ft. (8m)

NOTE: A line set extension can be purchased from an EG4 distributor. The line set extension is 16.4 ft. (5m) in length and ships pre-vacuumed ready to install. Installing a line set extension adds volume to the system which may lead to an approximate 3% loss in efficiency per additional line set. To compensate for the added volume, a licensed HVAC technician can add refrigerant (.2 oz./ft.) to the system. Install the line set extension before opening the valves on the outdoor unit, which releases refrigerant into the system and line sets.

Please scan the EG4 Line Set Extension Quick Start Guide QR code for more information.

3. BRIEF INTRODUCTION

3.1 MINI-SPLIT FEATURES

EG4 mini-split air conditioners consist of an indoor unit and an outdoor unit. Each mini-split has the capability to cool and heat, based on the need. The unit comes pre-charged with refrigerant supporting a DIY installation. Each unit comes with a remote control and can also be controlled by a smartphone via a third-party application.

3.2 PACKING LIST

SUPPLIED COMPONENTS		
Number	**Quantity**	**Description**
1	1	Indoor Unit
2	1	Indoor Unit Mounting Plate (ships attached to indoor unit)
3	1	Remote Control
4	2	AAA Battery
5	1	Signal Cable (indoor unit to outdoor unit)
6	1	Outdoor Unit
7	1	Weather Protection Wrapping Tape
8	1	Drainpipe 5 ft. length x .59 in. diameter (1.5m x 15mm)
9	1	Wall Sleeve
10	1	Sealant Putty
11	1	Manual
13	1	16.4 ft. (5m) Line Set (refrigerant lines) with Quick Connect fittings
14	3	Screws
15	4	Retaining pins
16	3	Sleeve Anchor

4. INSTALLATION TOOLS

The following bulleted list shows the different tools that may be required to properly install both the indoor and outdoor units.

- Drill with drill bit set
- 2.5 in. hole saw
- Phillips head screwdriver
- Adjustable wrenches
- Level
- Painter's tape
- Marker or pencil

5. INDOOR UNIT INSTALLATION

5.1 SELECT INSTALLATION LOCATION

Before installing the indoor unit, choose a suitable location.

Proper installation locations meet the following criteria:

- Proper airflow around the unit (*see recommended clearances listed below*)
- Adequate drainage
- Wall that supports the full weight of the unit
- Wall that limits vibration while the unit is running
- At least 3.3 ft. (1m) from any other electrical devices (*e.g., TV, radio, computer*)
- Allow for the associated tubing to fit through the wall without interfering with other wiring or piping already in place

DO NOT install the unit in the following areas:

- Near any source of heat, steam, or combustible gas
- Near any flammable items such as curtains or clothing
- Near any obstacle that might prevent air circulation
- Near a doorway or where outside air may blow on the indoor unit
- In direct sunlight exposure

The indoor unit requires the following clearances once mounted in place on the wall.

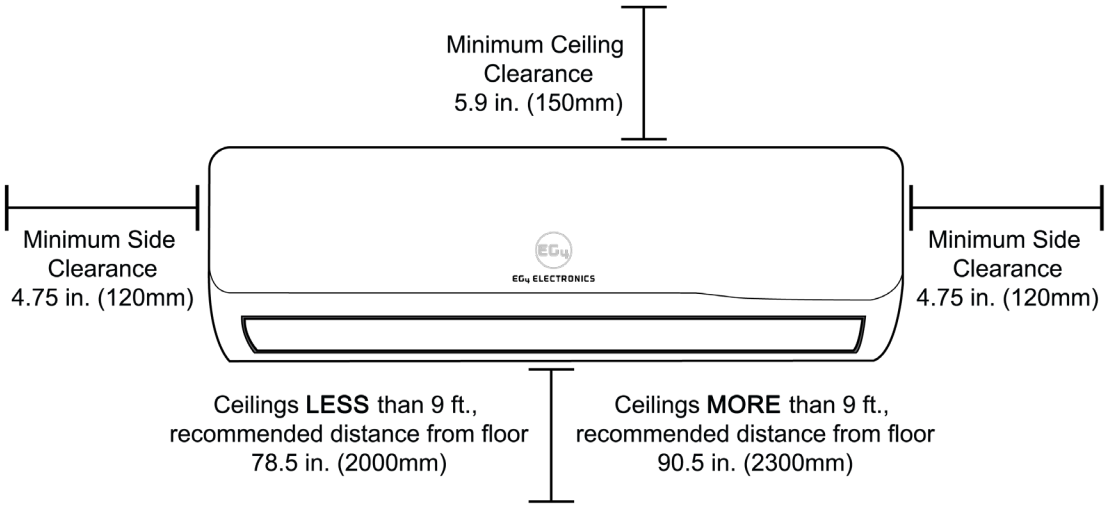

NOTE: While choosing a location for the indoor unit, be sure to leave ample room for a wall hole (see Section 5.3) to support the condensation hose, refrigerant line set, and signal wire. The position for the hole is to the right-hand side of the bracket.

5.2 WALL BRACKET INSTALLATION

The mounting bracket is used to attach the indoor unit to the wall.

NOTE:

- Verify the bracket is installed on a secure surface that is sufficiently dense to support the unit and prevent unwanted noise and vibration.
- If the mounting surface is made of sheetrock, install the mounting screws into studs or use adequate sheetrock anchors (*not supplied*) that can support the weight of the unit.
- If the mounting surface is made of brick, concrete, or similar material, drill 13/64 in. (5mm) pilot holes and place the provided sleeve anchors in the holes. Secure the mounting plate to the wall by tightening the screws into the bracket and sleeve anchors.

Steps:

1. The mounting bracket arrives attached to the back of the indoor unit. Remove the bracket using a Phillips-head screwdriver prior to the installation.
2. Place the mounting plate against the wall in a location that meets the standards as defined in Section 5.1.
3. Drill a hole for the center mounting screw that:
    a. has a stud or a wall anchor that can support the weight of the unit
    b. corresponds to the screw holes in the mounting plate
4. Secure the indoor mounting plate to the wall using the center mounting hole.
5. Use a level to ensure the mounting plate is level.

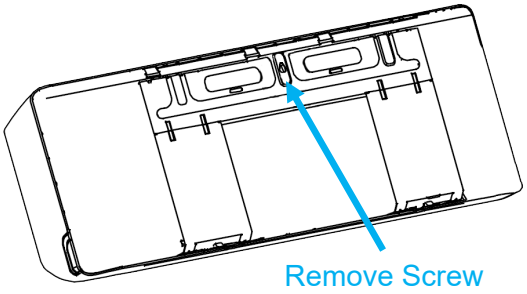

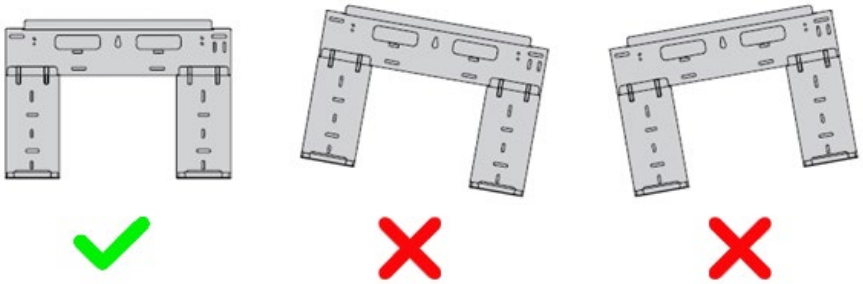

6. Mark the remaining installation screw holes. Drill pilot holes and install the screws. If sheet rock anchors are required, swivel the bracket side to side to install each anchor. Then realign bracket to anchor and install the screws.

5.3 DRILL WALL HOLE

A hole must be drilled in the wall for the refrigerant line set, the condensation hose, and the signal cable that will connect the indoor and outdoor unit.

NOTE: A cardboard template for marking the placement of the wall hole may be included in the box. The measurements on template correspond to the measurements listed below.

Steps:

1. Measure 40.75 in. (121mm) horizontally from the middle of the right-side leg and mark this location with a line. (*see image below*)
2. Measure 1.75 in. (45mm) vertically from the bottom of the right-side leg of the bracket and mark this location with a line. (*see image below*)
3. Mark the location where the lines from steps 1 & 2 intersect. This mark is the center of the hole that will be drilled in the next section. Please refer to the below image for reference.

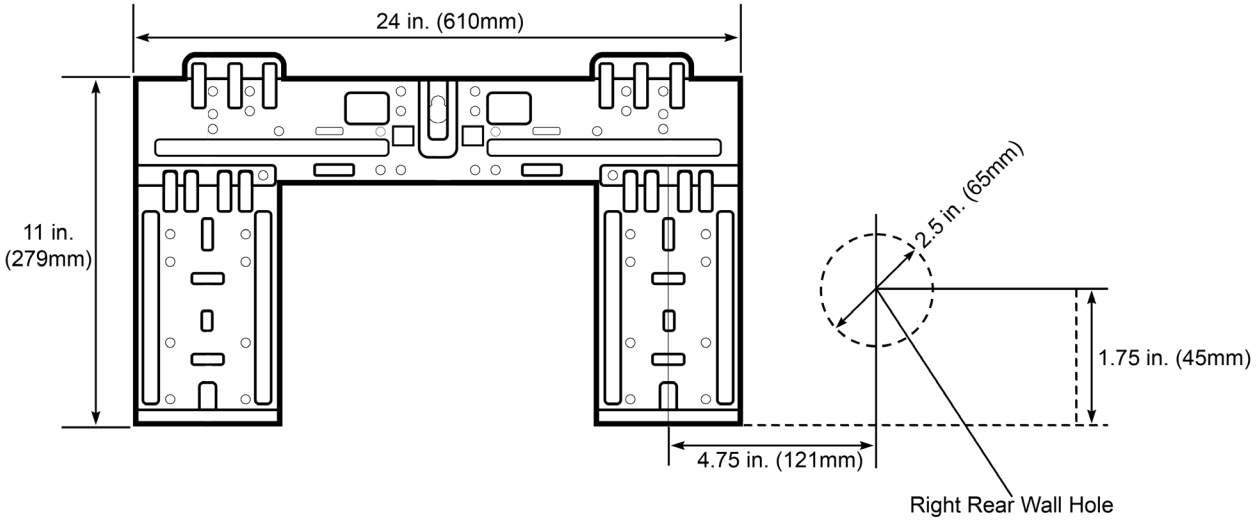

NOTE: The preferred installation method is to drill a hole behind the unit for the piping and wiring. If a hole cannot be placed behind the indoor unit, run the piping and wiring through the optional knockout panel on the side of the unit as shown below.

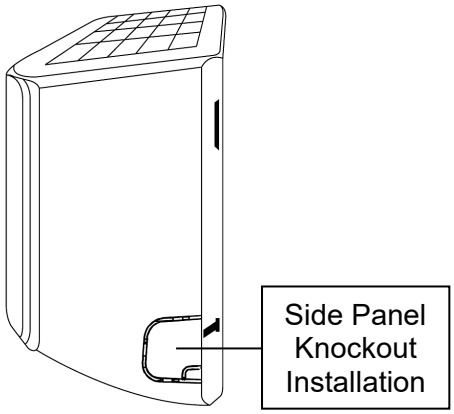

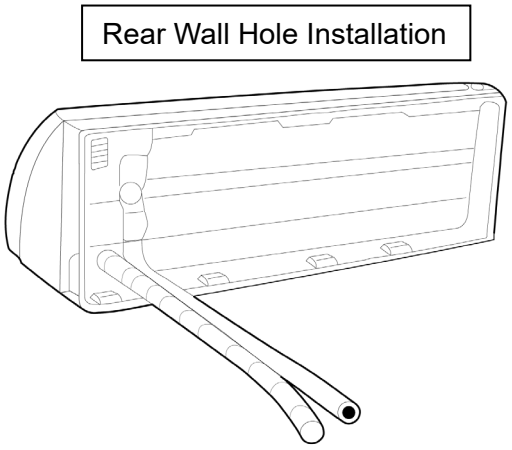

4. Using the appropriately sized hole saw and a drill, make a hole in the marked location. Be sure to angle the hole saw at a downward angle to aide with condensation pipe drainage as shown below.

CAUTION: When drilling the wall hole, be sure to avoid wires, plumbing, and other sensitive components.

INDOOR UNIT	HOLE SAW SIZE
9K & 12K	2.5 in. (65mm)

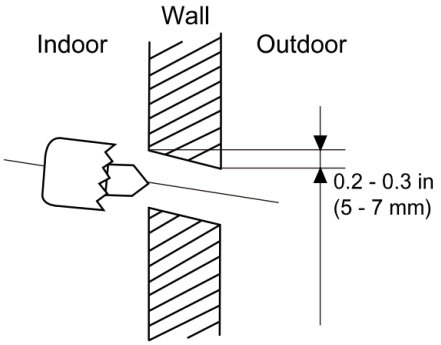

5. Place the provided wall sleeve in the wall hole. This sleeve helps to prevent damage to the wiring/pipes that will be installed through the hole in a later step.

5.4 CONNECT SIGNAL CABLE

To prepare the indoor unit for electrical connectivity, install one end of the signal cable to the electrical connections of the indoor unit.

NOTE: While preparing the indoor unit for installation, please disregard a 2-pronged female connector if present. This connector does not provide functionality and should remain unused. (The connector may vary in shape, size and color)

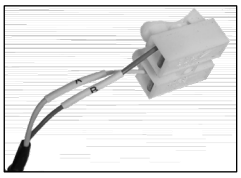

1. Open the front panel of the unit and locate the wiring box cover on the right side of the unit.
2. Open the wire box cover using a screwdriver to reveal the terminal block.
3. Unscrew the cable clamp below the terminal block and place it to the side.
4. While facing the back of the unit, feed the signal wire through the metal bracket to the terminal block area on the front side.

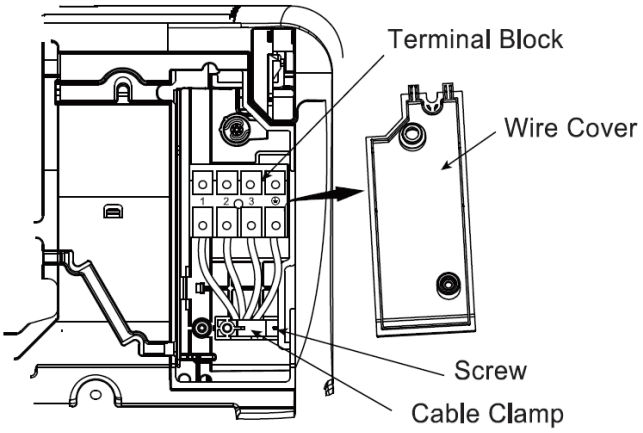

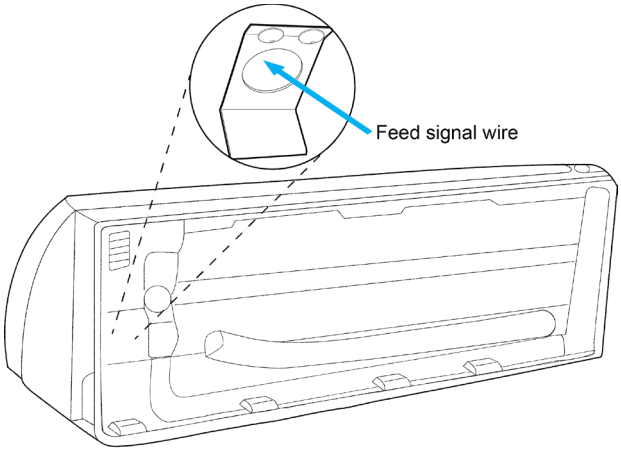

5. While in front of the unit, match the wire colors with the labels on the terminal block. Connect each wire's spade connector to its corresponding terminal, securely fastening each screw. (*see table*)

TERMINAL #	WIRE COLOR
1	Brown
2	Blue
3	Black
G	Yellow/Green

6. After checking to make sure every connection is secure, use the cable clamp to fasten the signal cable to the unit. Screw the cable clamp tightly.
7. Replace the wire cover on the front of the unit.

5.5 PREPARE PIPING

To prepare the piping for installation, the refrigerant line set must be straightened, and the condensation hose must be moved to the same side as the refrigerant line set. Doing so will support all lines being able to pass through the wall together as a single bundle.

1. Safely set the indoor unit on a secure table/platform to expose the back of the unit. This will allow access to the condensation drainpipe and refrigerant line set.

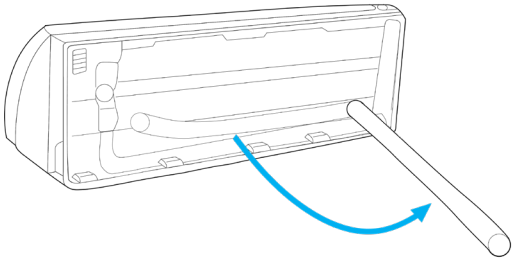

2. Pull the condensation drain hose away from the back of the unit. This hose will be plastic and is located on the right-hand side if standing at the back side of the unit.

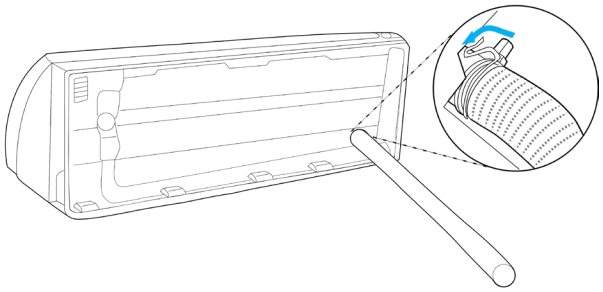

3. Locate the swivel clip where the condensation hose attaches to the unit. Rotate the swivel clip counterclockwise to unlock the clip. Remove the condensation hose by gently moving side to side in a twisting motion and pulling outwards.

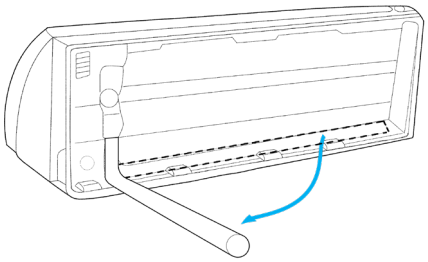

CAUTION: Be extremely careful not to dent or damage the refrigerant line set while bending it away from the unit.

4. Locate the black rubber plug on the side of the unit near the refrigerant lines. Carefully remove the plug slowly twisting it side to side while pulling outward. The plug fits snug so be careful not to tear or damage it.

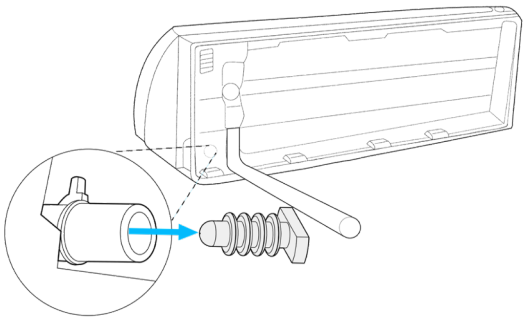

5. Connect the condensation drain hose to the drain fitting where the rubber drain plug was removed. Twist the swivel clip into place securing the hose. Slightly pull the hose to verify it is securely connected, ensuring a leak-free connection.

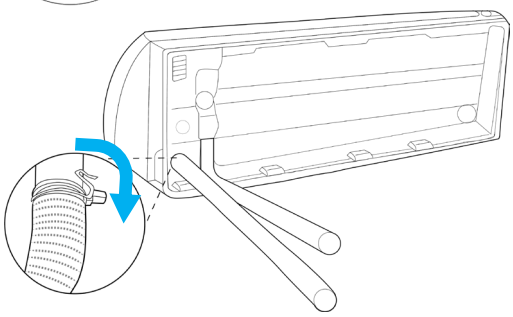

6. Insert the plug into the drain fitting where the condensation hose was removed from on the right side of the unit. Ensure the plug is inserted all the way past the ribs to ensure a tight seal free of leaks.

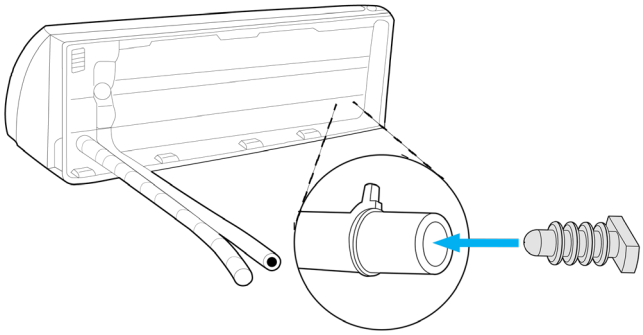

7. Locate the 5 ft. (1.5m) condensation drain hose that is packaged with the unit. Attach it to the drain hose that is already connected to the indoor unit. Ensure the two hoses make a good connection. Wrap the joint with waterproof tape to ensure the hoses do not come apart.

8. It is recommended to wrap the condensation drain hose, that will be housed indoors, with foam pipe insulation to prevent extra condensation buildup.

9. Bundle the refrigerant line set and the condensation drain hose together using vinyl tape. Be sure and attach the drain hose to the underside of the refrigerant pipes.

CAUTION: Make sure that the condensation drain hose is at the bottom of the bundle. Putting the drain hose at the top of the bundle can cause the drain pan to overflow, which may lead to fire or water damage.

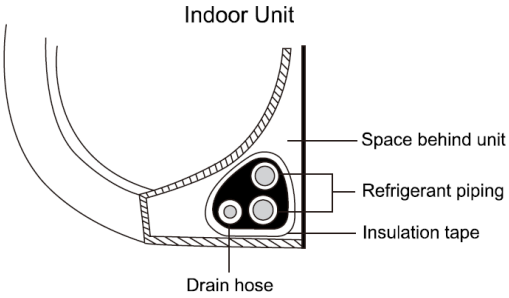

10. Using insulation tape, wrap the refrigerant pipes and drain hose tightly together.
11. Bundle the pipes and signal wiring together as one bundle before passing them through the wall. Painter's tape can be used here as it can be easily removed after the indoor unit is installed, leaving no residue.

5.6 MOUNT INDOOR UNIT

Follow the steps below to mount the indoor unit to the wall bracket:

HELPFUL TIPS:

- **Use the team-lift technique when lifting the indoor unit to guide the hose and wiring through the hole drilled in the wall.**
- **Keep in mind that the hooks on the mounting plate are smaller than the holes on the back of the unit. To line up and pass through the pipe and wiring bundle, the unit can be adjusted left or right by about 1.25 in. - 1.95 in. (30mm - 50mm), depending on the model.**

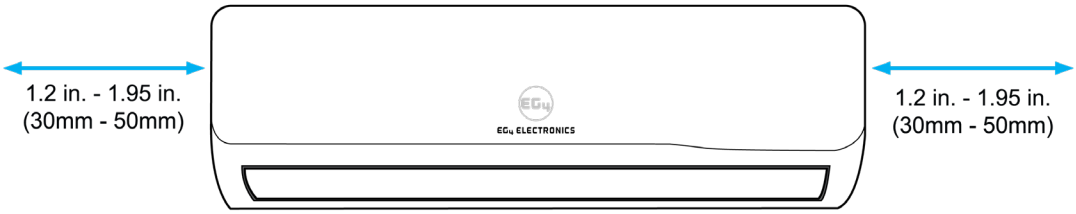

Move left or right

1. Double-check that the ends of the refrigerant line set are sealed with the factory installed caps to prevent dirt or foreign material from contaminating the pipes.
2. Slowly pass the wrapped bundle of refrigerant, condensation hose, and wiring through the hole in the wall.
3. Hook the top of the indoor unit on the upper hook of the mounting plate.
4. Using even pressure, push down on the bottom half of the unit. Keep pushing down until the unit snaps onto the hooks along the bottom of the mounting plate.
5. The communication wire and the refrigerant line set will be connected to the outdoor unit after the outdoor unit is securely fastened in place.

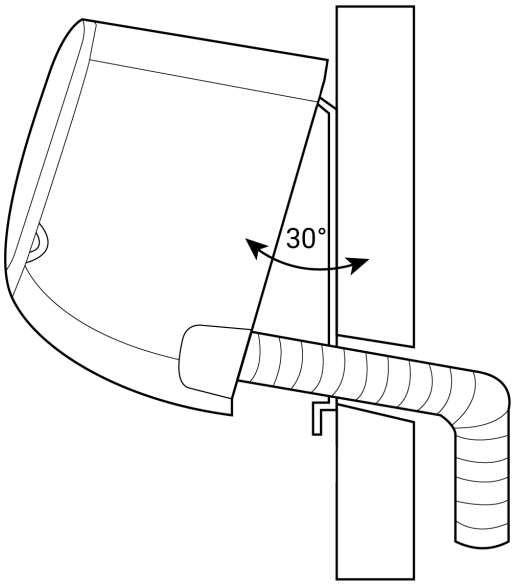

CAUTION: Verify the condensation drain hose is properly configured ensuring proper drainage as shown in the images below. Improper drainage may cause water damage to the home and property.

Proper drainage	Upward turns anywhere in the length of the drain hose will cause water traps.	Kinks in the drain hose will cause water traps.	Do not place containers at the end of the drain hose that could prevent proper drainage.
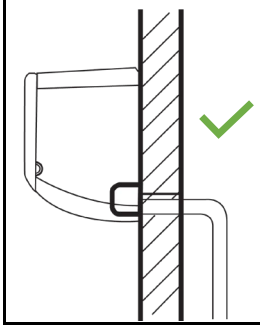	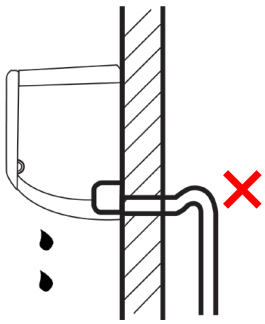	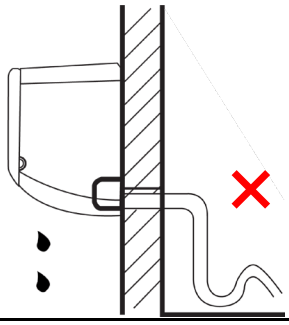	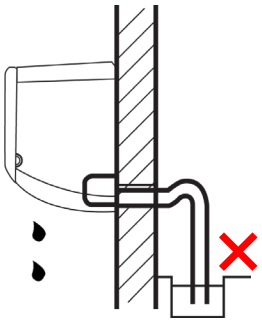

6. OUTDOOR UNIT INSTALLATION

6.1 SELECT INSTALLATION LOCATION

Before installing the outdoor unit, a suitable location must be chosen. The following standards will determine the location.

Proper installation locations meet the following standards:

- Meets all spatial requirements shown in the image below.
- Good air circulation and ventilation.
- Firm and solid location that supports the weight of the unit and mitigates vibration.
- Noise from the unit will not disturb others.
- Protected from prolonged periods of direct sunlight or rain.
- Where snowfall is expected, raise the unit above the base pad to prevent coil damage from ice build-up.
- Mount the unit high enough to be above the average accumulated area snowfall. The minimum height must be 18 inches off the ground.
- Mount the unit to a stable, non-moving structure to help mitigate excess vibrations.

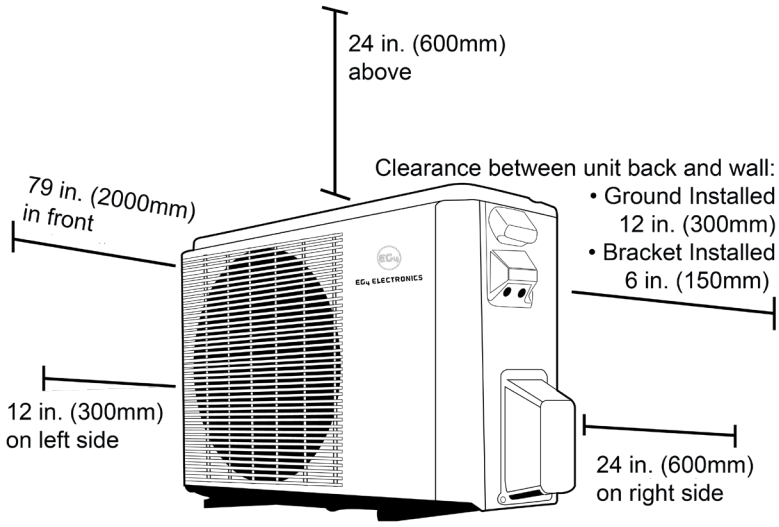

Clearance Requirements

DO NOT INSTALL

- Near an obstacle that will block air inlets and outlets
- Near public streets, crowded areas, or other locations where noise from the unit will disturb others
- Near animals or plants that will be harmed by hot air discharge
- Near any source of combustible gas or in a location that is exposed to large amounts of dust
- In a location exposed to excessive amounts of salty air

IMPORTANT: SPECIAL CONSIDERATIONS FOR EXTREME WEATHER

If the unit is exposed to heavy wind, install unit so the air outlet fan is at a 90° angle to the direction of the wind. If needed, build a barrier in front of the unit to protect from extremely heavy winds. Ensure the wind barrier does not lock necessary airflow.

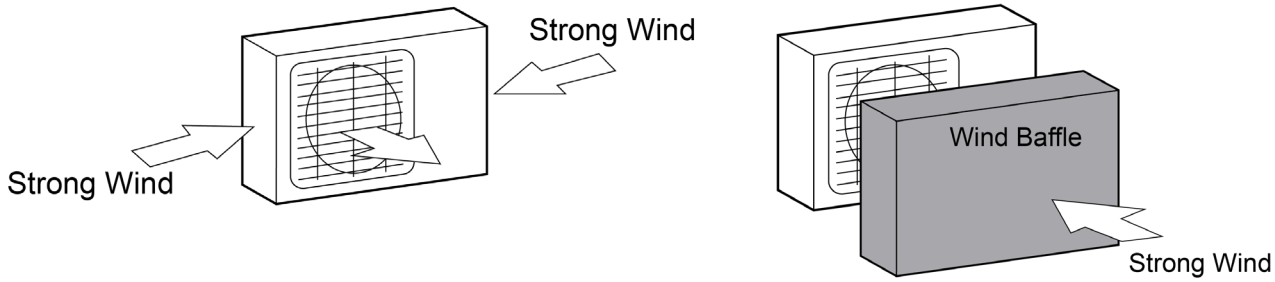

6.2 INSTALL DRAIN JOINT

Perform the following steps to install the drain joint. Running the unit in heat mode will require a drain joint. Before bolting the outdoor unit in place, install the drain joint at the bottom of the unit.

1. Insert the drain joint into the hole in the base pan of the unit.
2. Facing the front of the unit, rotate the drain joint 90° until it locks in place.
3. If needed, connect a drain hose extension (*not included*) to the drain joint to redirect water from draining under the unit during heating mode.

NOTE: There are two different types of drain joints depending on the type of outdoor unit.

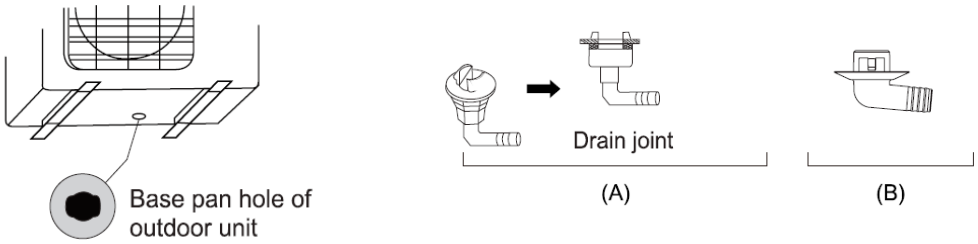

CAUTION: In cold climates, make sure that the drain hose is sloped properly to ensure swift water drainage. If water drains too slowly or is trapped inside the hose, it can freeze in the hose and flood the unit.

6.3 SECURE UNIT

The outdoor unit can be anchored to the ground or on a wall-mounted bracket. The distances between the mounting feet are listed in the chart below to aid in preparing the outdoor unit for installation.

IMPORTANT: The outdoor unit must be securely fastened before attaching the refrigerant line set as well as any required electrical cables. Attaching the line set and electrical cables to a secure unit will assist in protecting the line set and cables from over-flexing and damage due to unexpected movement of the unit.

9K & 12K BTU Units	A	21.2 in. (539mm)	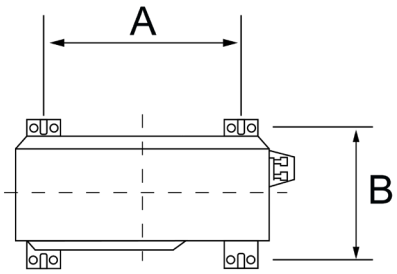
	B	12.9 in. (327mm)	

Unit Mounting Dimensions

WARNING: When drilling into concrete, eye protection is recommended at all times.

Ground Mounting

To install the unit on the ground or on a concrete mounting platform, complete the following:

1. Mark the positions for four expansion bolts based on dimensions in “Table 6.3” above.
2. Pre-drill holes for expansion bolts.
3. Clean concrete dust away from holes.
4. Temporarily place a nut on the end of each expansion bolt to protect the threads from damage.
5. Hammer expansion bolts into the pre-drilled holes.
6. Remove the nuts from expansion bolts, and place outdoor unit on the bolts.
7. Put a washer on each expansion bolt, then replace the nuts.
8. Using a wrench, tighten each nut until snug.

Wall Mounting

CAUTION: Before installing a wall-mounted unit, make sure that the wall is made of solid brick, concrete, or similarly strong material. The wall must be able to support at least FOUR times the weight of the unit.

To install the unit on a wall-mounted bracket, do the following:

1. Mark the position of bracket holes based on dimensions in the “Table 6.3” above.
2. Pre-drill the holes for the expansion bolts.
3. Clean dust and debris away from holes.
4. Place a washer and nut on the end of each expansion bolt.
5. Thread expansion bolts through holes in mounting brackets, put mounting brackets in position, and hammer expansion bolts into the wall.
6. Ensure that the mounting brackets are level.
7. Carefully lift the unit and place its mounting feet on the brackets.
8. Using a wrench, bolt the unit firmly to the brackets.

NOTE: If allowed, install the wall-mounted unit with rubber gaskets to reduce vibration and noise.

6.4 CONNECT SIGNAL AND POWER CABLES

The outside unit's terminal block is protected by an electrical wiring cover on the side of the unit. A comprehensive wiring diagram is printed on the inside of the wiring cover and is provided in this guide.

CAUTION: Before performing electrical work, read the following regulations:

- All wiring must comply with local and national electrical codes and must be installed by a licensed electrician.
- All electrical connections must be made according to the Electrical Connection Diagram located on the panels of the indoor and outdoor units.
- If there are any safety issues with the supply of power from the main panel, stop work immediately. Contact a licensed electrician for assistance with resolving the issue.
- Power supply voltage should be within 90-100% of rated voltage. An insufficient power supply can cause malfunction, electrical shock, or fire.
- All circuits, including any switches, should have a capacity 1.25 times the maximum unit current (*amps*).

- The qualified technician must use an approved circuit breaker or switch that disconnects all poles and has a contact separation of at least 1/8 in. (3mm).
- Make sure to properly ground the air conditioner.
- Every wire must be firmly connected. Loose wiring can cause the terminal to overheat, resulting in malfunction and possible fire.
- All wiring must be properly arranged to ensure that the electrical wiring cover can close properly on the outside unit. If the control board cover is not closed properly, it can lead to corrosion, which can cause the connection points on the terminal to overheat, which could result in fire and/or electric shock.
- **DO NOT** connect any other appliances to the same circuit.
- **DO NOT** let wires touch or rest against refrigerant tubing, the compressor, or any moving parts within the unit.

To install AC connections, perform the following:

1. Remove the electrical wiring cover from the unit by loosening the 3 retaining screws.
2. Remove the appropriate caps on the conduit panel to support conduit tube installation.
3. Temporarily mount conduit tubes (*not included*) on the conduit panel.
4. Properly connect both the power supply and low voltage lines to the corresponding terminals on the terminal block. (*see image below*)
5. Ground the unit in accordance with local codes.
6. Be sure to size each wire length several inches longer than required to create ample working room inside wiring cover.
7. Use lock nuts to secure the conduit tubes.
8. Replace the wire cover and reinstall the 3 screws.

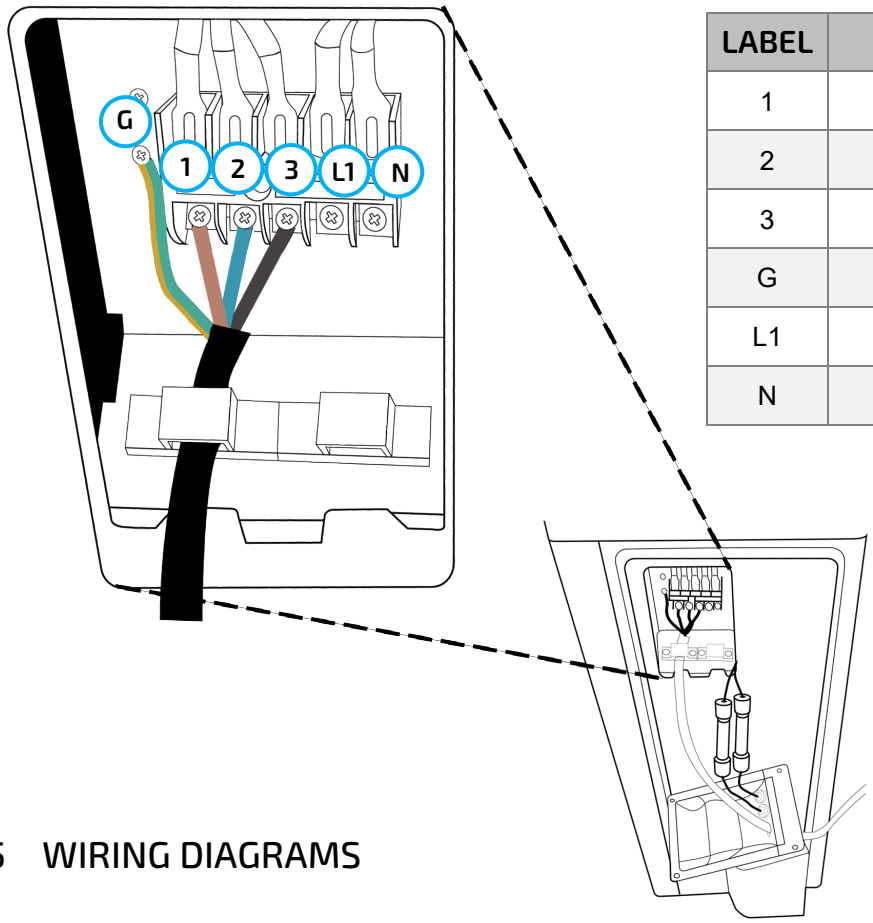

LABEL	WIRE SOURCE & COLOR
1	Signal Cable - Brown
2	Signal Cable - Blue
3	Signal Cable - Black
G	Signal Cable - Yellow/Green
L1	AC Line 1 - Black
N	Neutral - White

6.5 WIRING DIAGRAMS

Outdoor Unit Wiring Diagram

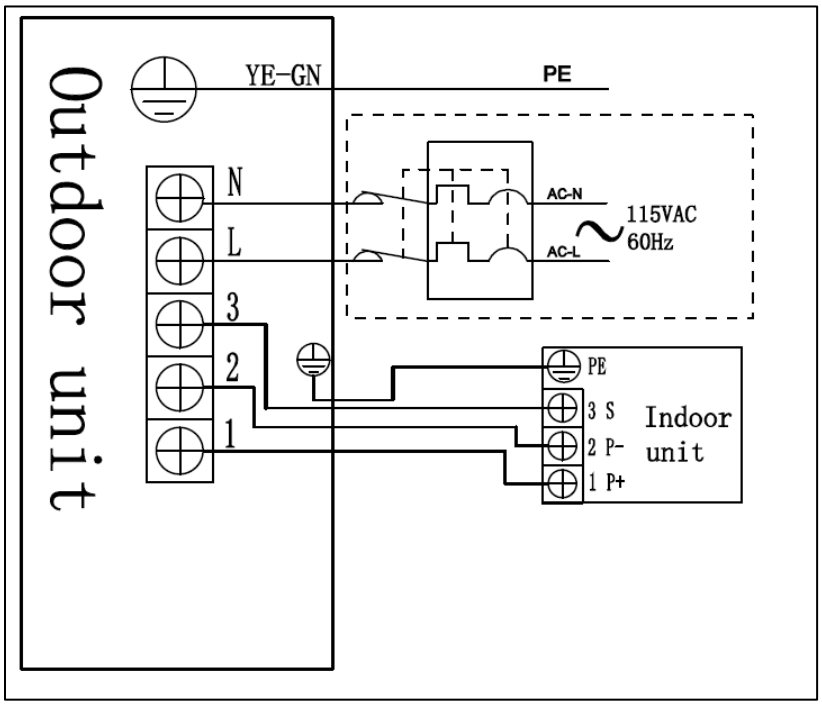

Indoor Unit Wiring Diagram

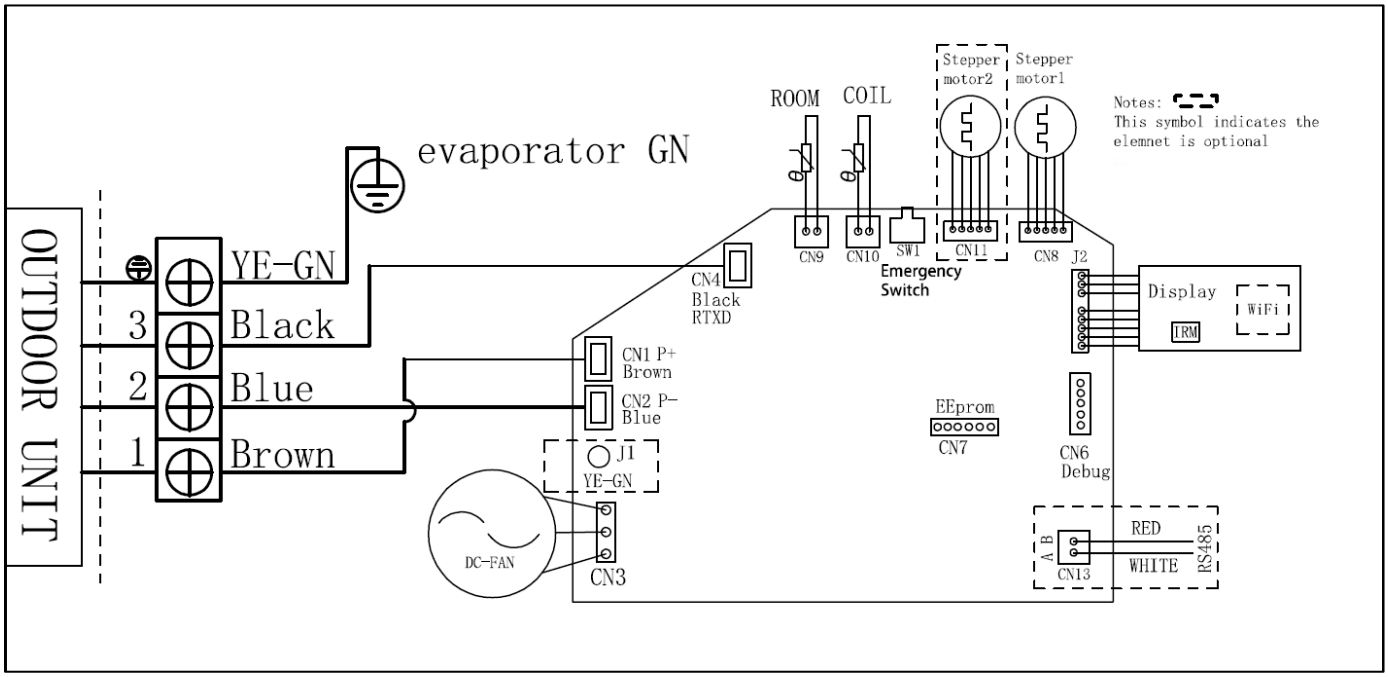

6.6 INSTALL REFRIGERANT LINE SET

The refrigerant line set is copper tubing factory fabricated with quick connect fittings to ensure leak free connections. The quick connect fitting uses a double sealing system with an automatic safety valve that releases refrigerant only when the outdoor unit is connected and sealed.

CAUTION: When working with the refrigerant line set:

- Do not change the length of the supplied quick connect line set tubing as it is pre-charged with freon gas. Excess tubing can be coiled behind the outdoor unit, taking care not to block its airflow.
- Extreme care must be taken not to kink the tubing, which could cause leaks.
- The minimum bend radius for the line set is 4 in. (102mm).
- The ends of the tubing have protective covers on them to prevent any dirt or debris from coming in contact with the connections. Do not remove the protective covers until immediately before the connection is made.
- If the line set connections are tightened with too little torque, they will leak. If they are tightened with too much torque, the connections could suffer damage. Please refer to the torque requirements when making the connections.
- The line sets are designed to only be installed once. The seal within the line set cannot be guaranteed if they are installed more than once.
- The line set quick connects contain a compression fitting to seal and do not require a thread sealant (Teflon tape, etc.). Using a sealant may cause the connection to leak over time.
- Contact a licensed HVAC technician if there are any are concerns connecting the line set connectors.

NOTE: A line set extension can be purchased from an EG4 distributor. The line set extension is 16.4 ft. (5m) in length and ships pre-vacuumed ready to install. Installing a line set extension adds volume to the system which may lead to an approximate 3% loss in efficiency per additional line set. To compensate for the added volume, a licensed HVAC technician can add refrigerant (.2 oz./ft.) to the system. Install the line set extension before opening the valves on the outdoor unit, which releases refrigerant into the system and line sets.

Please scan the EG4 Line Set Extension Quick Start Guide QR code for more information.

NOTE: Be careful to align the line set connections correctly, making sure the dimensions of each refrigerant line set match in diameter. Unscrew the protective caps and place the threaded connector just inside the threads of opposite end and tighten the first few threads by hand.

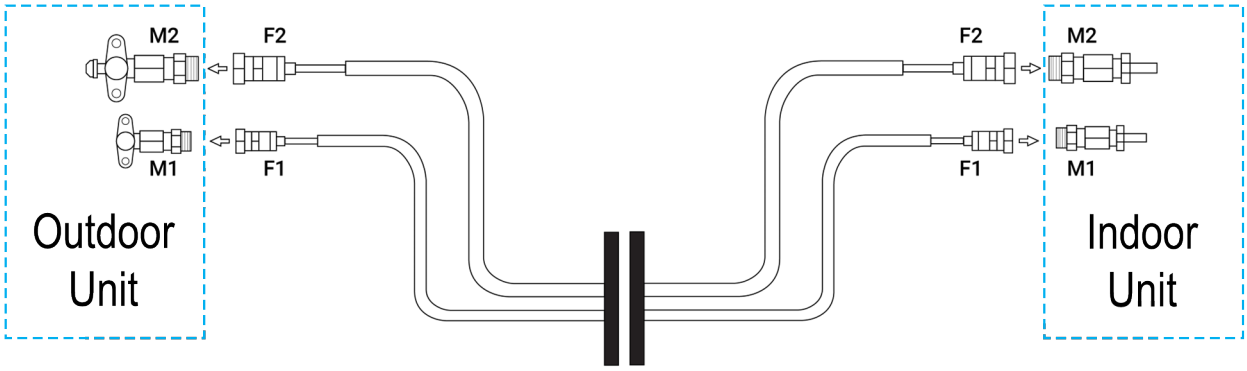

Installation Steps:

1. Prepare indoor unit line set by placing a hand on the underside of the piping coming through the hole in the exterior wall. Using the other hand while applying even pressure, carefully bend the piping downward toward the wall, being mindful not to damage or dent the piping in the process.
2. Prepare the roll of line set by carefully unwinding it to the length required to make the connection between the outdoor unit and the indoor unit. Only unwind as much as necessary and allow the remaining line set to stay coiled.
3. Pack the wall hole with the supplied neoprene (*or spray foam can be used*) to seal the hole, filling any space that was not taken up by the line set and communication wire.
4. Remove the protective cover from the M1 connector of the indoor unit. (*see diagram above)*
5. Locate the unrolled end of the line set and remove the protective cover from the F1 connector. (*see diagram above*)
6. Connect the line set quick connector F1 to M1. Tighten to 19-22 ft-lbs. (25-30Nm).
7. Repeat the steps for indoor connector M2 and line set connector F2.

   Note: If a line set extension is being used, please install the line set extension before continuing to step 8. See the QR code on the previous page for a link to the line set extension quick start guide.
8. Coil the excess tubing behind the outdoor unit.
9. Remove the protective covers from the M1 connector on the outdoor unit and the F1 connector on the line set.
10. Connect the line set connector F1 to the outdoor unit connector M1. Tighten to 19-22 ft-lbs. (25-30Nm).
11. Repeat the steps for indoor connector M2 and line set connector F2.
12. Install the retaining pins at each indoor and outdoor connection point M1 and M2.

    (Example of outdoor connection points with retaining pin shown to the right)
13. Wrap the indoor unit line set connection points with the weather protection wrapping tape included with the system.

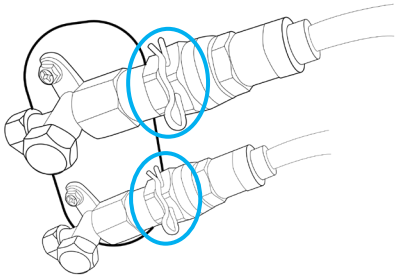

6.7 RELEASE REFRIGERANT INTO THE SYSTEM

Perform the following steps at the outdoor unit.

1. Remove the protective cap from the upper valve body.
2. Insert a hex key wrench and turn the top valve counterclockwise until it seats against the outer seal (stops turning).
3. Reinstall the protective cap and tighten it to 22-30 ft-lbs. (30-40Nm). Take care not to overtighten.
4. Repeat the above steps for the bottom valve.
5. After both valves are open and the caps are reinstalled, complete the leak test in the next section.

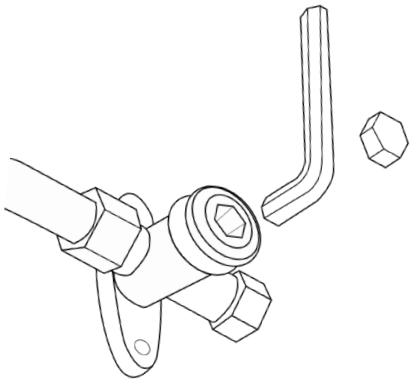

CAUTION: If the valves are not fully opened, it could cause the system to malfunction and/or cause damage.

6.8 GAS LEAK TESTS

Check all the line set connections (*at indoor unit and outdoor unit*) for leaks.
There are two different methods to check for gaseous leaks.

Soap and Water Method

Using a soft brush, apply soapy water or liquid detergent to all line set connection points on the indoor unit and outdoor unit. If any bubbles begin to form, that indicates there is a leak, and the connection needs to be re-tightened. Tighten the connection and recheck it for leaks.

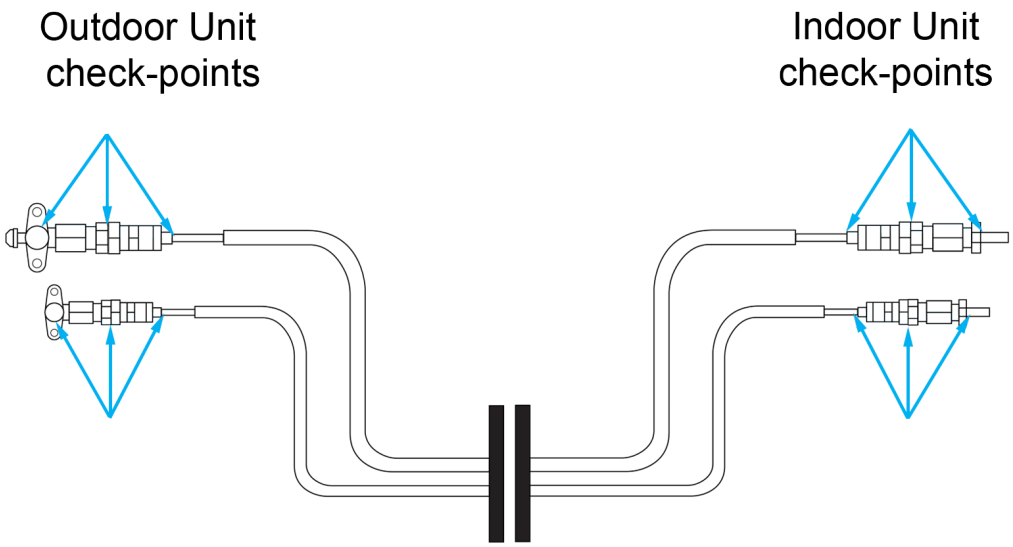

Leak Detector Method
If using leak detector, refer to the device's operation manual for proper usage instructions.

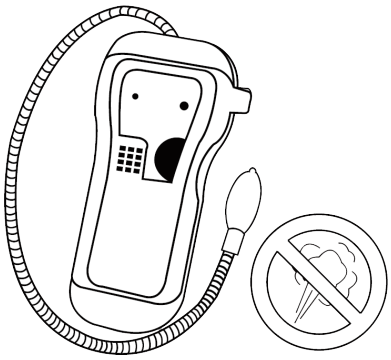

7. ELECTRICAL CHECKS

After installation, confirm that all electrical wiring is installed in accordance with local and national regulations before proceeding.

WARNING: ***All wiring must comply with local and national electrical codes and must be installed by a licensed electrician.***

Check all Connections
Check all wiring connections to ensure there are no loose or uncovered ends exposing bare connections or wire. Using a multimeter, verify the proper voltage at each connection point.

Check Grounding Work
Measure grounding resistance by visual detection and with grounding resistance tester. Grounding resistance must be less than 5 ohms.

8. TEST RUN

8.1 BEFORE TEST RUN

Only perform test run after completing all the following steps:

- Electrical Safety Checks - Confirm that the electrical system is safe and operating properly.
- Gas Leak Checks - Check all flare nut connections and confirm that the system is not leaking.
- Confirm that gas and liquid (*high and low pressure*) valves are fully open.

8.2 INSTRUCTIONS

Perform the test run for at least 30 minutes.

1. Connect power to the unit.
2. Press the ON/OFF button on the remote controller to turn it on.
3. Press the MODE button to scroll through the following functions, one at a time:
    a. COOL - Select the lowest possible temperature.
    b. HEAT - Select the highest possible temperature.
4. Let each function run for 5 minutes, and perform each of the checks listed in the table below:

CHECK TO PERFORM	PASS	FAIL
No electrical leakage		
Unit is properly grounded		
All electrical terminals are properly covered		
Indoor and outdoor units are securely installed		
All line set connection points do not leak		
Water drains properly from the drain hose		
All line set is properly insulated		
Unit performs Cool function properly		
Unit performs Heat function properly		
Indoor unit louvers rotate up and down properly		
Indoor unit responds to remote control		

8.3 OPERATING TEMPERATURE RANGES

MODE	ROOM TEMPERATURE	OUTDOOR TEMPERATURE
Cool	61°F – 90°F (16°C – 32°C)	32°F – 131°F (0°C – 55°C)
Heat	32°F – 90°F (0°C – 32°C)	5°F – 86°F (-15°C – 30°C)
Dry	50°F – 90°F (10°C – 32°C)	32°F – 122°F (0°C – 50°C)

Notes:

- **If the air conditioner operates for extended periods in cooling mode and the humidity is high (*over 80%*), condensed water may drip out of the unit. If this occurs, set the vertical airflow louver to its maximum angle (*vertical toward the floor*), and set it to HIGH fan mode.**
- **Optimum performance will be achieved within the above operating temperatures. If the air conditioner is operated outside of the above temperatures, certain safety protection features might be activated and cause the unit to function abnormally.**
- **The remote control cannot be used to turn on the COOL function when the ambient temperature is below 60°F (16°C). In this instance, use the MANUAL CONTROL button to test the COOL function. (*See section 9.6*)**

8.4 OPTIMAL OPERATION

To achieve optimal operating performance, please note the following:

- **DO NOT** put any objects near the air inlets/outlets. Doing this will impair performance and could cause the unit to shut down.
- Adjust the airflow direction so it is not blowing directly onto personnel or at an extreme angle.
- Adjust the temperature to achieve moderate comfort levels. An excessively low or high temperature setting wastes energy.
- Keep windows and doors closed to improve performance.
- Limit energy usage (*run time*) using the TIMER function.
- Inspect the air filters periodically and clean them as needed.

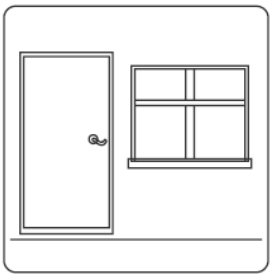

Doors and windows should be kept closed.

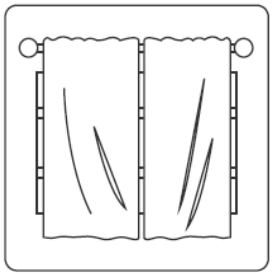

Closing the curtains while heating also helps keep the heat in

8.5 AIRFLOW DIRECTION

Adjustment of the vertical and horizontal louvers will change airflow direction of the indoor unit to prevent discomfort and/or uneven room temperatures.

CAUTION: ***To reduce the risk of injury, read all instructions!***

DO NOT: Put fingers into the panel of the blower and suction side. The high-speed fan inside may cause injury.

DO NOT: Operate the unit for extended periods of time in COOL or DRY mode with the vertical airflow direction set with too much of a downward angle. This could cause condensation to form on the surface of the vertical louver and allow moisture/water droplets to drop onto furnishings or the floor.

DO NOT: Move the vertical louver manually, as this could cause it to become out of sync. If this occurs, follow these steps:

1. Turn off the power to the unit.
2. Remove the wireless module from the back of the front cover.
3. Turn off the power to the circuit at the breaker.
4. Wait a few seconds and turn the power back on at the breaker.
5. Reinstall the wireless module into the front cover.
6. Turn the power to the unit back on.

NOTE: ***After a quick restart, the vertical louver may remain static for approximately 10 seconds.***

NOTE: ***The open angle of the vertical louver should not be set too small when using COOL or HEAT mode, as it will restrict airflow and reduce performance of the unit.***

Vertical Airflow "Up/Down" Adjustment:
This function is performed by using the SWING/DIRECT button on the remote control, while the unit is operating. The vertical louver can move in small increments for each press, or continuously swing up and down automatically.

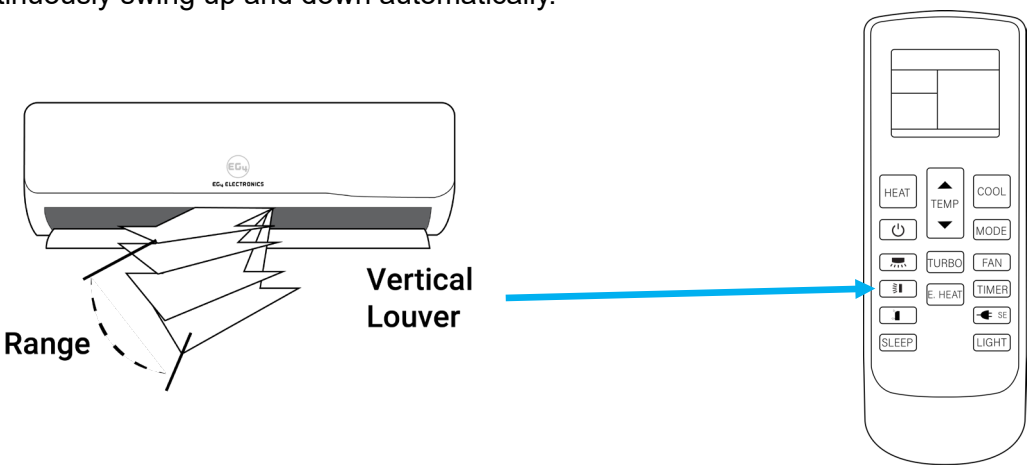

Horizontal Airflow (Left/Right) Adjustment:
The angle of the horizontal louver must be set manually. Move the deflector rod, located on the underside of the unit, by pushing the tab manually left or right to adjust the airflow from side to side as desired.

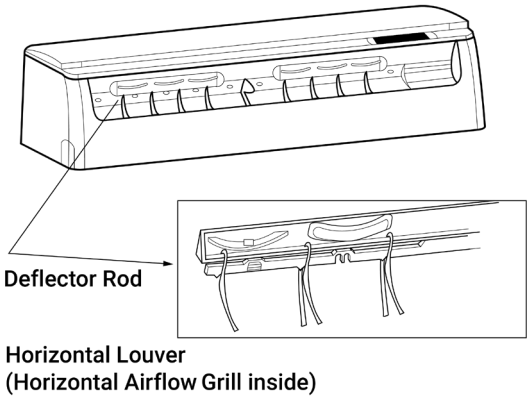

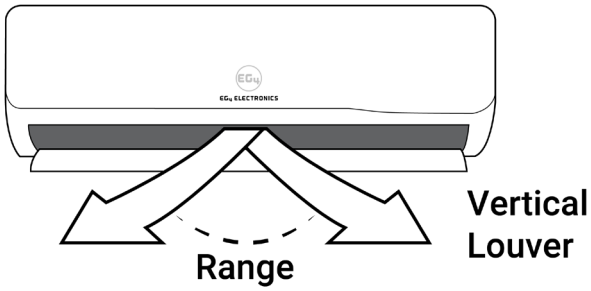

8.6 INDOOR UNIT DISPLAY

The indoor unit LED display is equipped to display information from different models. Not all the features listed below will be equipped on the unit purchased. Please check the indoor unit LED display window of the unit purchased to see which of these features the unit has.

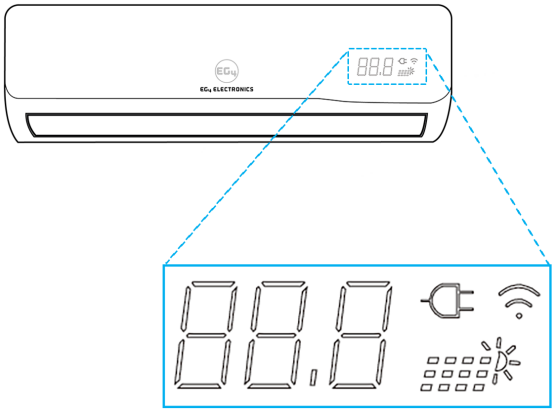

The light is displayed when the photovoltaic controller is working on hybrid units. (*Not available on this unit*).

This will display when the Wireless Control feature is activated (*some units*).

When connected to AC power, the light displays white.

This is the temperature display and will also display operational features and error codes. See “Section 11.3” for a list of error codes.

Will display when the unit is defrosting.

8.7 REMOTE CONTROL OPERATION

The air conditioner has an infrared remote that can fully operate the unit. Some functions on the remote may not be available for all units. For example, the AC power limiter is only available on hybrid models.

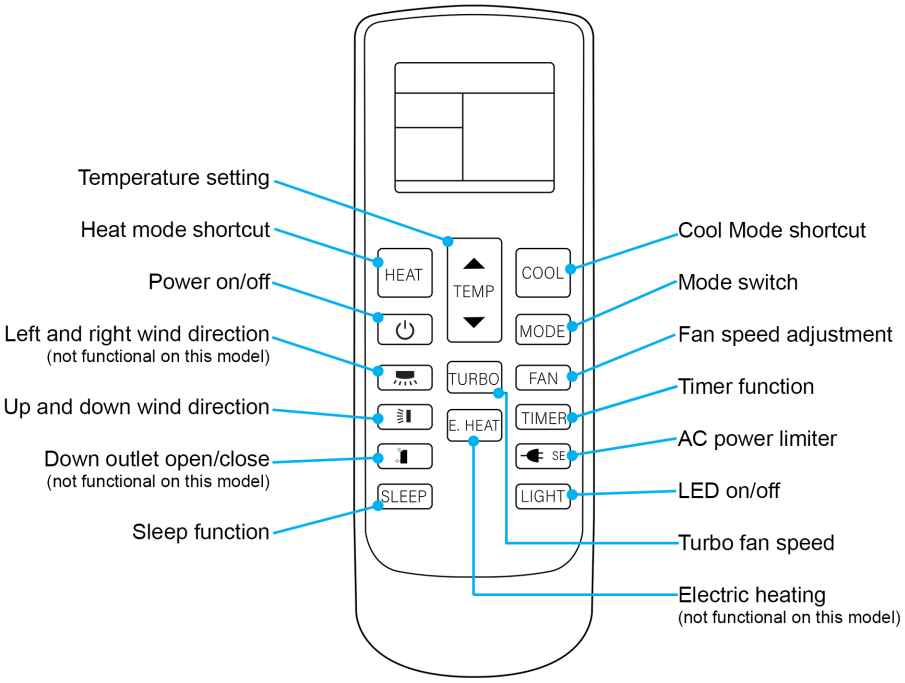

BUTTON	DESCRIPTION
Power	Switch the air conditioner off or on.
Mode	Selects one of the following modes: • Auto • Cooling • Dehumidifying • Air Supply • Heating
Cool	Sets the unit to enter the cooling mode with a set temperature of 78°F (26°C). • With the unit on or off, press the button and the unit will enter cooling mode with a set temperature to 78°F (26°C). • In the “timer on” state, press this button to cancel the timer setting and turn on cooling mode with a set temperature of 78°F (26°C). • In sleep state, press this button to run the cooling mode with a set temperature to 78°F (26°C).

Heat	Sets the air conditioner into heating mode with a set temperature of 75°F (24°C). • With the unit on or off, press the button and the unit will enter heating mode with a set temperature to 75°F (24°C). • In the timer on state, press this button to cancel the timer setting and turn on heating mode with a set temperature to 75°F (24°C). • In sleep state, press this button run the heating mode with a set temperature to 75°F (24°C).
Temp	In cooling, heating, and dehumidifying modes, press the “up arrow” or “down arrow” to adjust the temperature setting ranging from 60°F − 90°F (16°C − 32°C). **Note**: The temperature is not adjustable in the air supply mode.
Fan	Select the blower output speed of: "Breeze / Low / Mid / Med-High / High / Auto". **Note**: There is no automatic wind speed in air supply mode.
Timer	Press the "timer" button to turn on the timer, then press the "up/down" button to set the time. The range is 1-24 hr. time-period. Press the "timer" button to complete the selection. If the timing has been set, press the "timer" button again to cancel the timing.
Turbo	Enables the fan to run at a maximum speed. When in turbo mode, the fan speed display on the remote control will disappear. The indoor unit will be noticeably louder when running in Turbo mode. **Note:** • Pressing the fan speed will cancel the "Turbo" function. • Enabling Sleep mode will cancel the Turbo function. • Turbo mode cannot be enabled in automatic mode, dehumidification mode, air supply mode, or when the timer or sleep mode is running.
AC Power Limiter	Press the “AC Power Limiter” button to limit the amount of AC input when solar input is also being used. **Note:** Not available with this unit. This feature only works on hybrid models.
Light	Turns the indoor unit LED Display off or on.
Sleep	Press the "sleep" button to turn on sleep mode. The fan speed and temperature automatically adjust, but the remote-control display remains unchanged. The unit will automatically exit sleep mode after 8 hours of continuous operation in sleep mode and revert to the previous running state. **Note:** Sleep mode cannot be turned on in air supply mode.
Up/Down Wind Direction	Adjusts the air output direction up or down.
Left and Right Wind Direction	This feature is not available on this unit. The left and right wind direction can be changed using the levers inside the louver opening.
Electric Heating	This feature is not available on this unit.
Down Outlet	This feature is not available on this unit.

NOTE: ***Changing temperature readout***

The unit could ship with one of two remotes which look structurally the same. However, each unit uses a unique sequence of button presses to change the temperature readout.

- Method 1: Press the TEMP Up and Down buttons simultaneously.
- Method 2: Power down the remote and hold both the TEMP Up button and the Fan button simultaneously for ~5 seconds.

8.8 MANUAL OPERATION

CAUTION: The manual control button is intended for testing purposes and emergency operation only. Please do not use this function unless the remote control is lost and is absolutely necessary. To restore regular operation, use the remote control to activate the unit.

The unit must be turned off before the manual operation function can be activated.

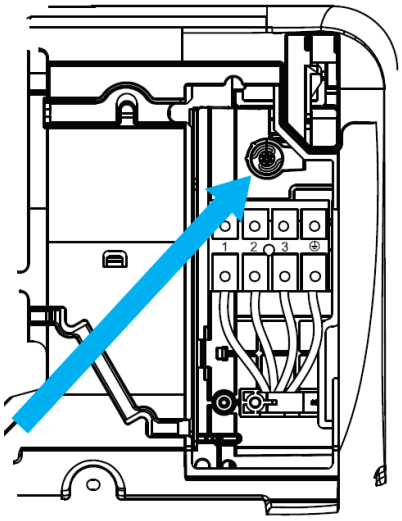

9. PHONE APP

The mini-split can be controlled and monitored using an iOS or Android app. This section will provide the installation and configuration steps for the app as well as how to use the app.

9.1 INSTALLATION

Perform the following installation steps to install and set up the app:

1. To download and install the phone app, scan the QR code below. (The same code can also be found on the side of the indoor unit)

iOS and Android

2. Select **Download**.

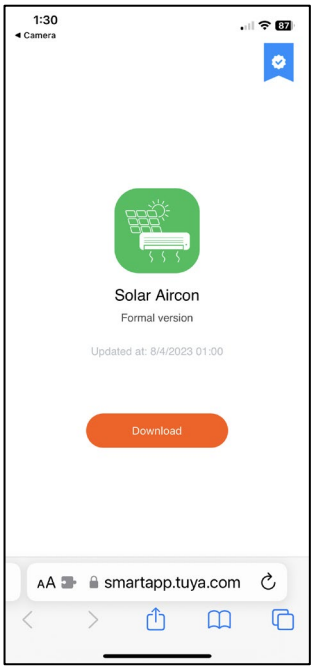

3. Select **Get.**

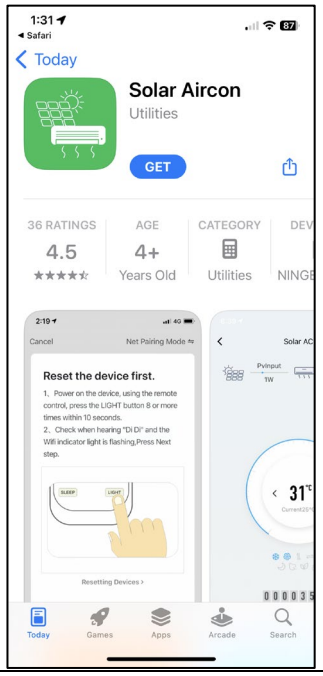

4. Select **Allow**.

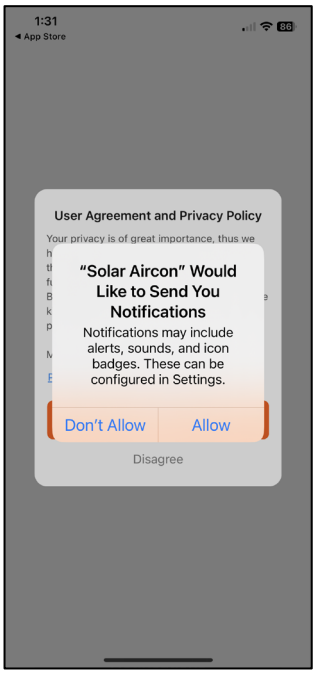

5. Select **Agree**.

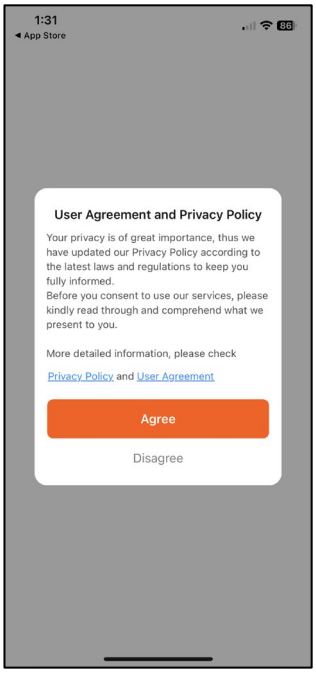

6. Select **Sign Up**.

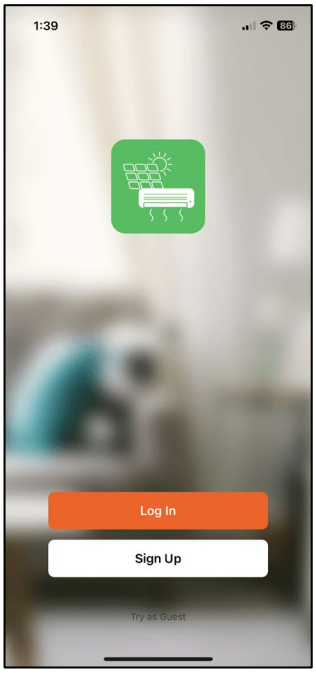

7. Provide an **email address**, select **I Agree**, click **Get Verification Code**.

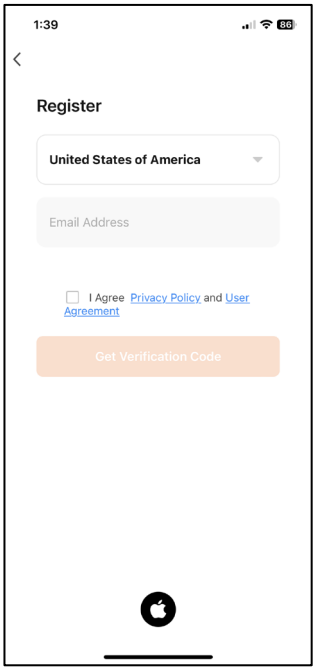

8. Locate the verification code emailed to the email address used in the previous step. Provide the code when requested by the app.

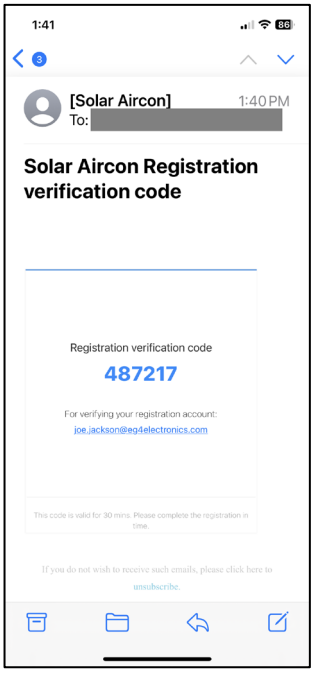

9. Enter a password then select **Done**.

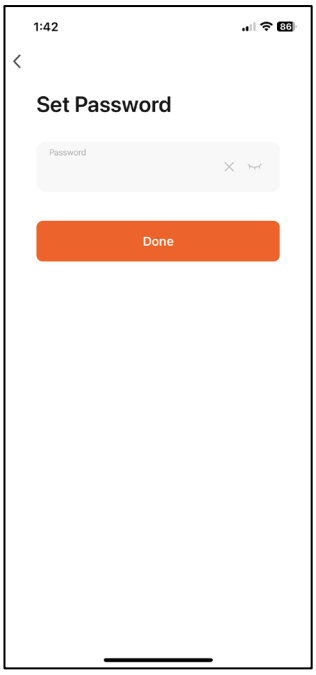

10. Select **Allow**. This will provide access to the hardware device's Wi-Fi.

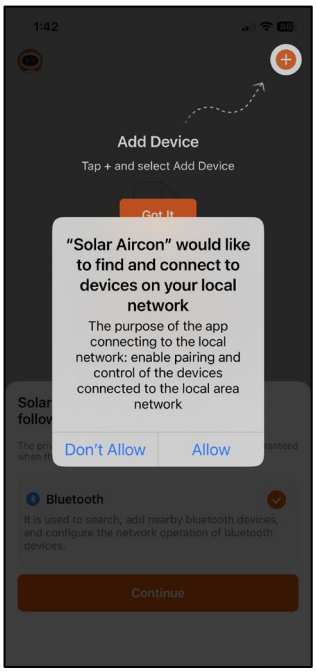

11. Select **OK**. This will provide the app access to the hardware device's Bluetooth.

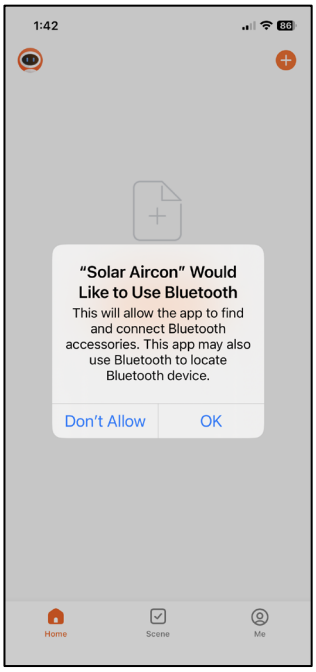

12. Select **Continue.** This will allow the app to use location services.

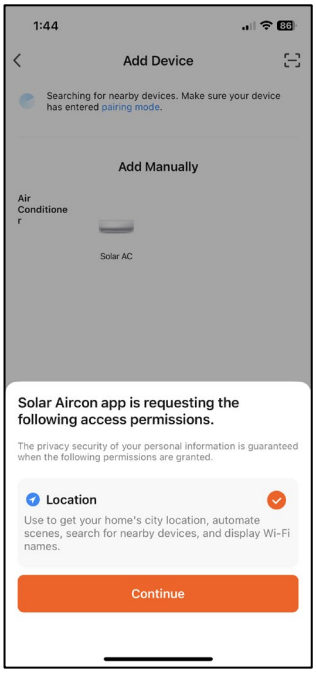

13. Turn the air conditioner on using the remote. Press the **LIGHT** button 8 times or more within 10 seconds. When the incremental beeps are heard, the Wi-Fi indicator should be flashing.

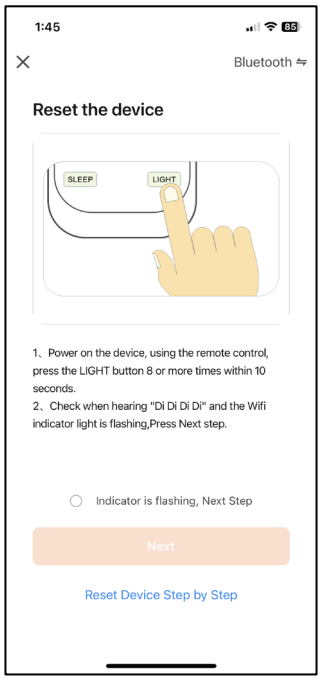

14. Select **Add**. If the mini-split unit does not show up, verify pair mode is enabled in the previous step.

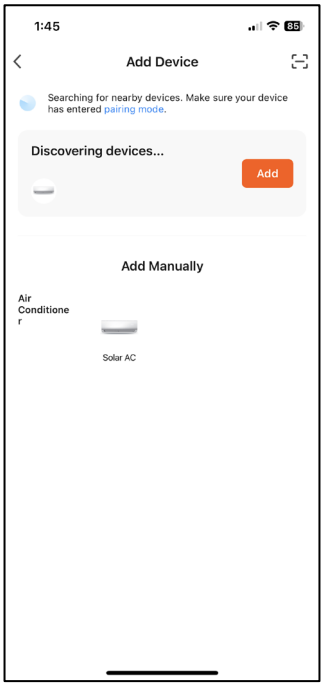

15. The device will be displayed as “Being added”.

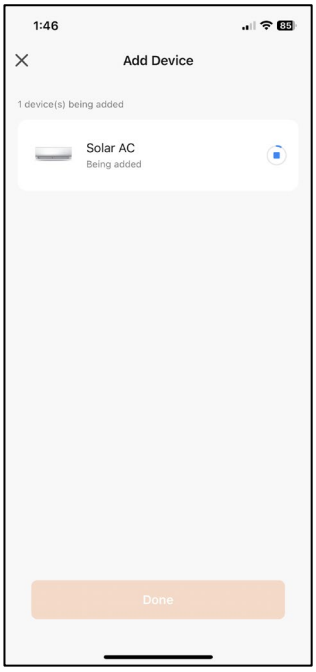

16. Select **Done**. The App is now configured to the mini-split and is ready for use.

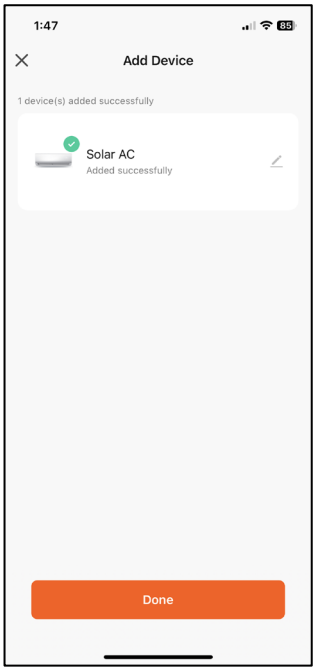

9.2 USING THE APP

The following information demonstrates some of the settings that can be displayed and set using the phone app.

Main Screen

ITEM	DESCRIPTION
A	Displays the system name
B	Select to edit settings within the APP
C	Real time PV input measured in watts (*Will only function on hybrid models*)
D	Real time AC input measured in watts
E	Displays current temperature and set temperature.
F	The illuminated icons represent features that are currently enabled.
G	Counter that displays the cumulative energy saving in watt hours.
H	A pull-up menu that provides settings for the following: • Power • Cooling • Heating • Fan Speed • Mode • Vertical • Light • Eco • Sleep • C°/F° • AC Limiter

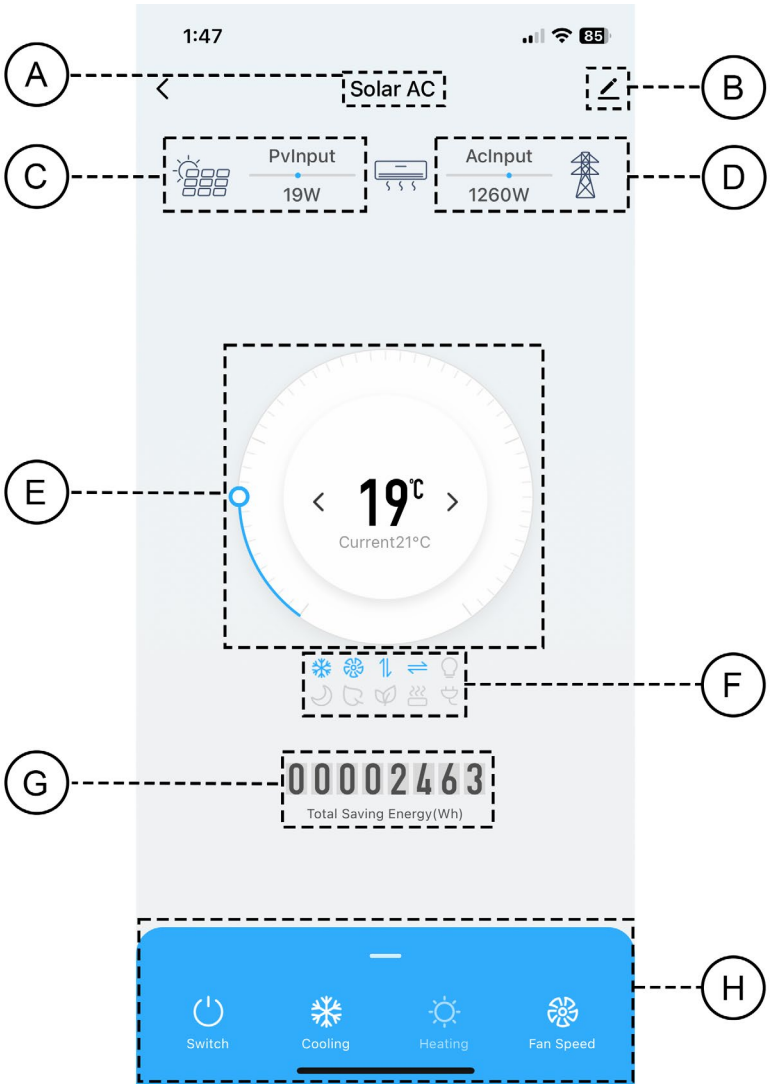

Pull Up Menu Settings

ITEM	DESCRIPTION
Power Switch	Turns the unit on or off.
Cooling	Selects cooling mode.
Heating	Selects heating mode.
Fan Speed	Selects desired fan speed: • Auto • Low • Mid • High • Turbo
Mode	Selects desired mode: • Auto • Cold • Hot • Wind • Dry
Vertical	Enables or disables vertical louvers from moving up and down.
Horizontal	Does not function on this model.
Light	Turns on or off the indoor unit LED display.
ECO	Enables ECO mode.
Sleep	Enables Sleep mode.
Anion	Does not function on this model.
Electricity Heat	Does not function on this model.
°C/°F	Toggles between Celsius and Fahrenheit.
AC Limiter	Enables the AC limiter function. When enabled, AC power is limited from 0-600W. (*Will only function on hybrid models*)

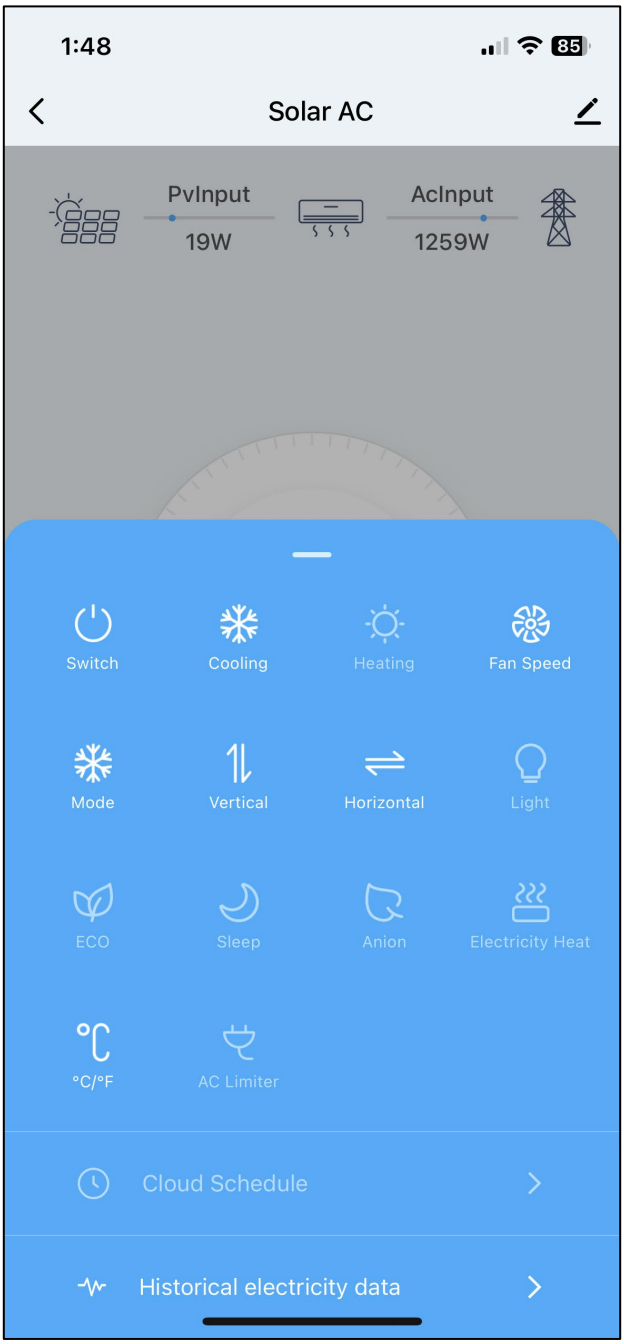

10. CARE AND MAINTENANCE

CAUTION: Power must be turned off before attempting any kind of cleaning. Before performing maintenance, turn the power off to the unit and then disconnect the power to the circuit at the breaker. Failure to do this could cause electrical shock and injury.

DO NOT use benzene, thinner, polishing powder, or similar solvents for cleaning. These could cause the plastic to deform and/or crack.

DO NOT clean the unit with excessive amounts of water.

DO NOT touch the metal parts of the unit when removing the filter. Injuries can occur when handling the sharp metal edges.

DO NOT use water to clean the inside of the unit. Exposure to water can destroy the insulation, which could lead to electric shock.

DO NOT use a chemically treated cloth or duster to clean the unit.

DO NOT touch the air freshening (*Plasma*) filter for at least 10 minutes after turning off the unit.

DO NOT clean the unit with combustible cleaning agents. These could cause fire and/or deformation of the unit.

DO NOT wash the air filter with water hotter than 104°F (40°C).

DO NOT expose the filter to direct sunlight, as this could cause it to shrink. Allow the filter to dry in the shade.

10.1 CLEANING THE INDOOR UNIT

Exterior:

Wipe the exterior of the indoor unit with a soft dry cloth. If the unit is very dirty, wipe it with a cloth soaked in warm water.

NOTE: ***A clogged air filter can greatly reduce heating and cooling efficiency of this unit. It is recommended to clean the unit every 2 weeks.***

Air Filter and Air Freshener:

1. Open the front by carefully lifting both ends at the same time. While lifting, at a certain angle there will be an audible click and the lid will become self-supporting.

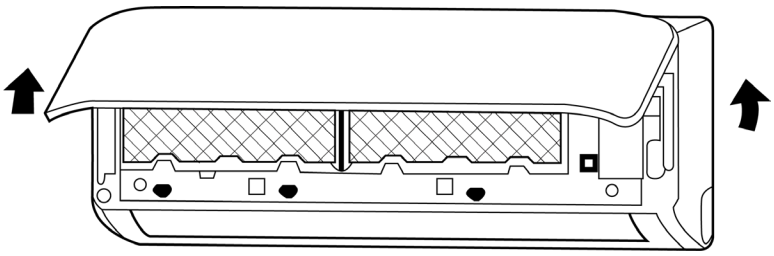

2. Use the filter tabs to lift the filter slightly upward and then pull it outwards the front of the unit. Extract the filter by gently drawing it downward. Replace as necessary.

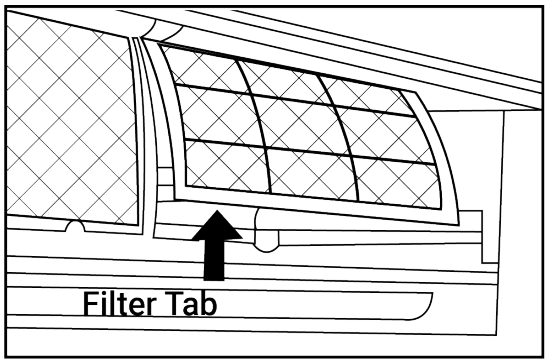

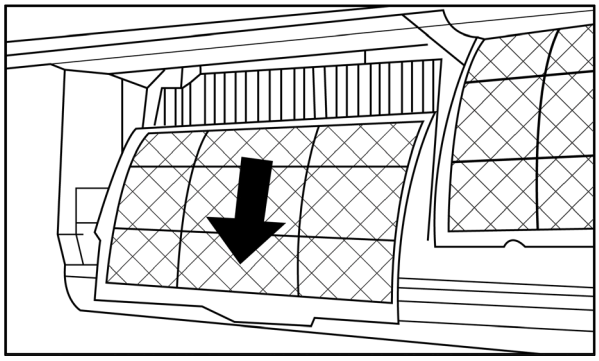

3. Unclip the small air-freshening filter from the larger air filter. Clean the large air filter with a vacuum or with warm, soapy water. Be sure to use a mild detergent and rinse with fresh water. Shake off the excess water and allow it to dry in a cool area. Once the larger air filters are dry, re-clip the small air-freshening filter into the large air filter. Replace the small air-freshening filter if necessary.

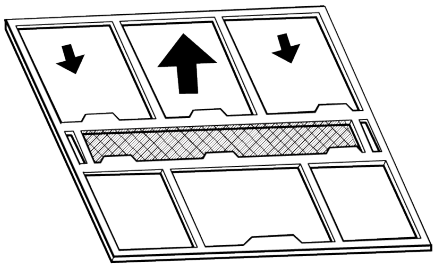

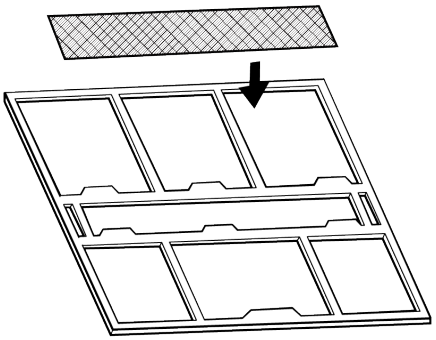

4. Re-insert the air filter back into the unit by gently pushing the top of the filter up into the unit and then lowering the bottom part into place.

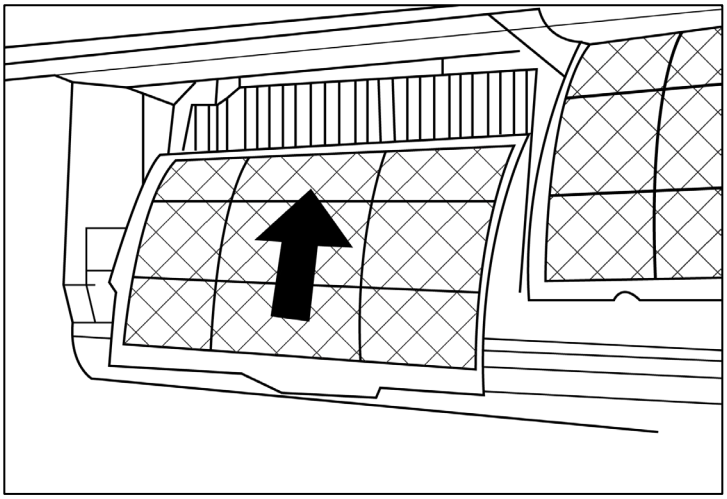

5. Close the front panel of the unit. Make sure that the buckles snap into the chassis securely and the front panel is completely closed.

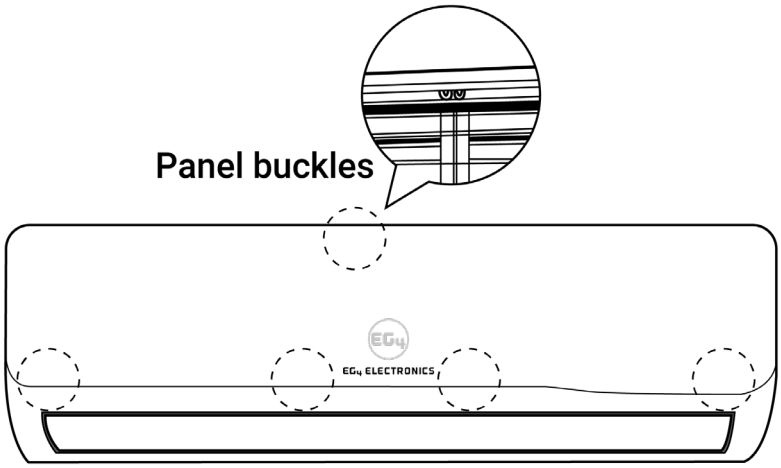

10.2 PREPARATION FOR EXTENDED NON-OPERATION

If the unit will not be used for an extended period of time (*e.g. from the end of summer to the beginning of the following summer*), perform the following:

1. Clean the indoor unit and filters as outlined in section 10.1.
2. Operate the unit in FAN-Only mode for at least 8 hours to dry out the inside of the unit.
3. Turn off the unit. Then, turn off the power to the circuit at the breaker. The unit should be the only appliance on this circuit.
4. Remove the batteries from the remote control.
5. The outdoor unit also requires periodic maintenance. However, it is highly recommended to contact a qualified service professional to perform this.

10.3 PRE-SEASON INSPECTION

After prolonged non-operation, perform the following:

1. Check for damaged or disconnected wires.
2. Check/clean the indoor unit and filters.
3. Check for water and oil leaks.
4. Check for blockages in the airflow inlet and outlet.
5. Replace batteries in the remote control.
6. Turn on the power to the circuit breaker when the unit is ready for use.

11. TROUBLESHOOTING

11.1 COMMON ISSUES AND CAUSES

ISSUE	POSSIBLE CAUSE
Unit does not turn on when pressing the Power button	The Unit has a 3-minute protection feature that prevents the unit from overloading. The unit will not restart within three minutes of being turned off.
The unit changes from COOL/HEAT mode to FAN mode.	The unit may change its setting to prevent frost from forming on the unit. Once the temperature increases, the unit will start operating in the previously selected mode again.
	The set temperature has been reached, at which point the unit turns off the compressor. The unit will continue operating when the temperature fluctuates again
The indoor unit emits a white mist	In humid regions, a large temperature difference between the room's air and the conditioned air can cause white mist.
Both the indoor and outdoor units emit white mist	When the unit restarts in HEAT mode after defrosting, white mist may be emitted due to moisture generated from the defrosting process.
The indoor unit makes noises.	A rushing air sound may occur when the louver resets its position.
	A squeaking sound may occur after running the unit in HEAT mode due to expansion and contraction of the unit's plastic parts.
Both the indoor unit and outdoor unit make noises	Low hissing sound during operation. This is normal and is caused by refrigerant gas flowing through both indoor and outdoor units.
	Low hissing sound when the system starts, has just stopped running, or is defrosting: This noise is normal and is caused by the refrigerant gas stopping or changing direction.
	Squeaking sound: Normal expansion and contraction of plastic and metal parts caused by temperature changes during operation can cause squeaking noises.
The outdoor unit makes noises	The unit will make different sounds based on its current operating mode.
Dust is emitted from either the indoor or outdoor unit	The unit may accumulate dust during extended periods of non-use, which will be emitted when the unit is turned on. This can be mitigated by covering the unit during long periods of inactivity.
The unit emits a bad odor	The unit may absorb odors from the environment (*such as furniture, cooking, cigarettes, etc.*) which will be emitted during operations.
	The unit's filters have become moldy and should be cleaned.
The fan of the outdoor unit does not operate	During operation, the fan speed is controlled to optimize product operation.
Operation is erratic, unpredictable, or unit is unresponsive	Interference from cell phone towers and remote boosters may cause the unit to malfunction. In this case, try the following: • Disconnect the power, then reconnect. • Press ON/OFF button on remote control to restart operation.

11.2 PROBLEMS, CAUSES, AND SOLUTIONS

PROBLEM	POSSIBLE CAUSES	SOLUTIONS
Poor cooling performance	Temperature setting may be higher than ambient room temperature	Lower the temperature setting
	The heat exchanger on the indoor or outdoor unit is dirty	Clean the affected heat exchanger
	The air filter is dirty	Remove the filter and clean it according to the instructions
	The air inlet or outlet of either unit is blocked	Turn the unit off, remove the obstruction and turn it back on
	Doors and windows are open	Make sure that all doors and windows are closed while operating the unit
	Excessive heat is generated by sunlight	Close windows and curtains during periods of high heat or bright sunshine
	Too many sources of heat in the room (*people, computers, electronics, etc.*)	Reduce amount of heat sources
	SLEEP function is activated	SLEEP function can lower product performance by reducing operating frequency. Turn off SLEEP function.
The unit is not working	The grid power is off	Turn on grid power
	Remote control batteries are dead	Replace batteries
	Time is activated	Turn time off
Poor heating performance	The outdoor temperature is lower than 44°F (7°C)	Use an auxiliary heating device.
	Cold air is entering through doors and windows	Make sure all doors and windows are closed during use
Error code appears in the LED display of the indoor unit.	The unit may stop operation or continue to run safely. If the indicator light continues to display an error code, wait for about 10 minutes. The problem may resolve itself. If not, disconnect both solar and grid power, then connect it again 2 minutes later. Turn the unit on. If the problem persists, turn off the unit and contact an authorized service center. (*See error codes listed in section 11.3*)	

11.3 INDOOR UNIT LED ERROR CODES

CODE	DESCRIPTION
01	Indoor data wrong
03	Indoor and outdoor unit communication wrong
04	Indoor keys stuck
05	Outdoor data wrong
06	Indoor fan motor wrong
31	Indoor air temperature sensor wrong
32	Indoor evaporator temperature sensor wrong
35	Outdoor air temperature sensor wrong
36	Outdoor condenser temperature sensor wrong
37	Air outlet temperature sensor wrong
51	Indoor fan motor lost speed
55	Compressor feedback wrong
58	Outdoor fan motor wrong
72	High voltage protection
73	Current input limitation
75	Compressor high temperature protection
76	Low voltage protection
79	Demagnetization protection control failure
81	PFC over current
82	Total power protection
83	AD abnormal detection
84	Unstable current
85	Compressor setting data wrong
86	IPM_FO edge fault
87	IPM_FO level fault
91	IMP over temperature
92	Compressor lack of phase
93	Compressor lost speed
94	IPM over voltage
95	IPM over current
96	IPM current shortage

NOTES

NOTES

CONTACT US

support@eg4electronics.com
(903) 609-1988
www.eg4electronics.com